SONY

KV-27XSTA

MODEL

SERVICE MANUAL

KV-27XS
RM-635

SERVICE MANUAL

AEP Model

Chassis No. SCC-774B-A

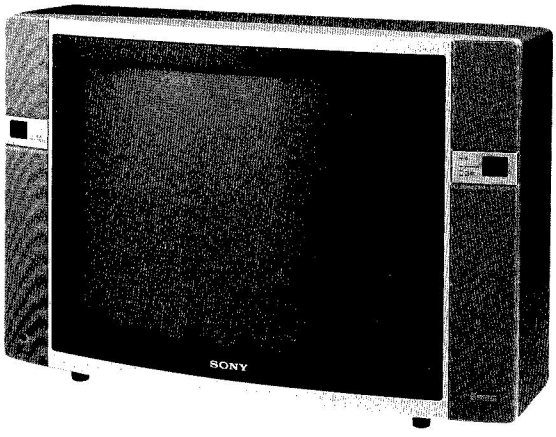

August, 1986

RX-2 CHASSIS

Note: The service manual for RM-635 has been issued separately.

SPECIFICATIONS

Television system	CCIR TV standards (system B,G and H)
Colour system	PAL/SECAM
Zweiton system	Two carrier system
Channel coverage	VHF channels E2-S20 UHF channels E21-E68
Programming system	30 programmes Automatic programming digital tuning
Picture tube	Approx. 68 cm (27 inches), approx. 64 cm screen measured diagonally 114-degree deflection Trinitron system
Aerial	75-ohm standard aerial socket (DIN 45325/IEC 169-2)
Audio output	10 W + 10 W (music power)
Input/output	21-pin connector in accordance with the requirements of CENELEC standard
Outputs	Audio output connector (5-pin DIN) Recording output: 1 mV rms/kilohm Line output: variable, 0-2 V rms (max.) impedance less than 1 kilohm External speaker terminals (2-pin DIN) Headphones jack (stereo phone jack)
Power requirements	220-240 V ac, 50 Hz
Power consumption	120Wh
Dimensions	Approx. 800 x 543 x 475 mm (w/h/d)
Weight	Approx. 52kg
Accessory supplied	Remote Commander RM-635
Optional accessory	OPK-303 teletext adaptor

Design and specifications are subject to change without notice.

TRINITRON® COLOR TV

SONY®

CTV

TABLE OF CONTENTS

Section	Title	Page
1. GENERAL		
1-1.	Location and Function of Controls	3
2. DISASSEMBLY		
2-1.	Rear Cover Removal	5
2-2.	Control Block Ass'y Removal	5
2-3.	Picture Tube Removal	6
2-4.	D Board Removal	6
3. OPK-303 ATTACHING		7
4. SET-UP ADJUSTMENTS		
4-1.	Beam Landing	8
4-2.	Convergence	9
4-3.	G2 and White Balance	9
4-4.	Focus (RV902)	9
4-5.	V. CENT Adjustment	10
5. BLOCK DIAGRAM		11
6. EXPLODED VIEWS		
6-1.	Cabinet	15
6-2.	CRT	16
6-3.	Chassis	17
7. ELECTRICAL PARTS LIST		18

SAFETY-RELATED COMPONENT WARNING !!

COMPONENTS IDENTIFIED BY SHADING AND MARK ⚠ ON THE SCHEMATIC DIAGRAMS, EXPLODED VIEWS AND IN THE PARTS LIST ARE CRITICAL TO SAFE OPERATION. REPLACE THESE COMPONENTS WITH SONY PARTS WHOSE PART NUMBERS APPEAR AS SHOWN IN THIS MANUAL OR IN SUPPLEMENTS PUBLISHED BY SONY.

SECTION 1
GENERAL

1-1. LOCATION AND FUNCTION OF CONTROLS

On the front panel

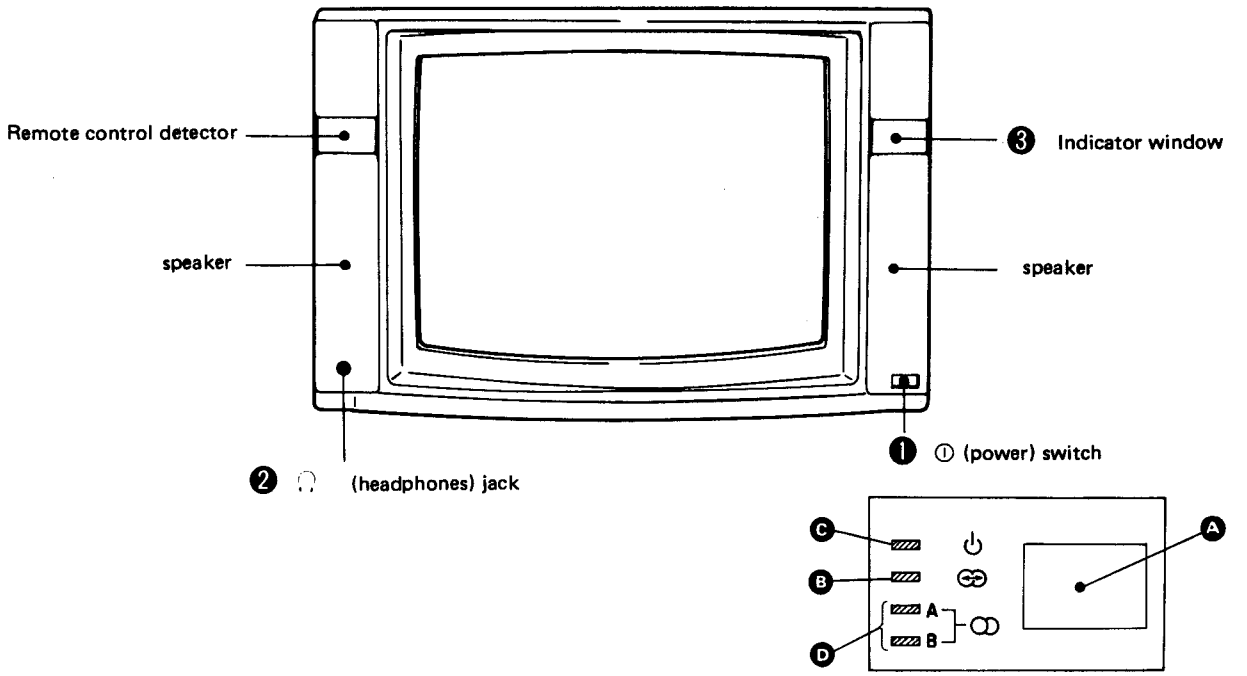

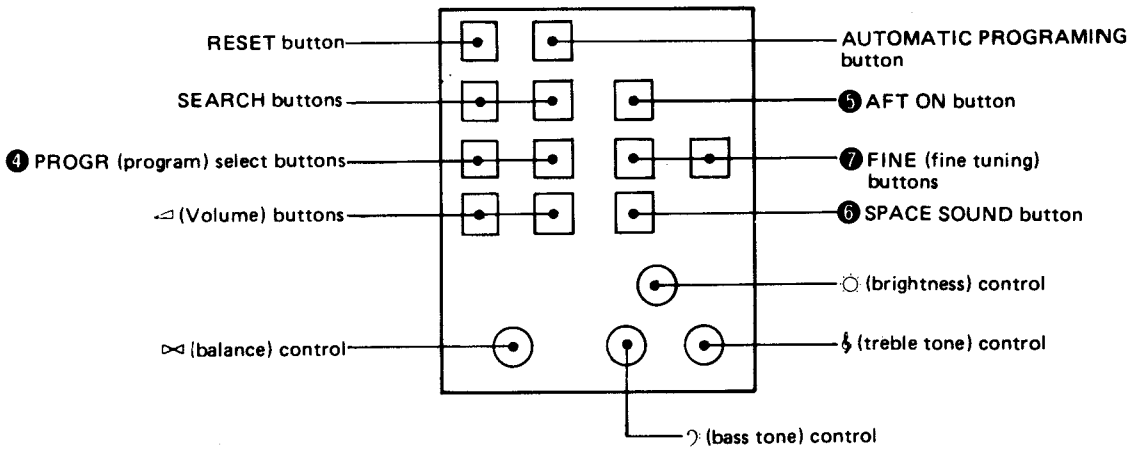

On the rear panel

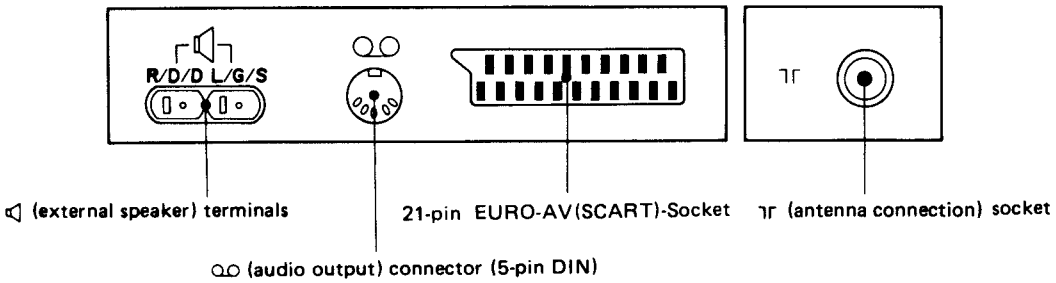

❶ ⏻ (power) switch
Press to turn the TV on. Press again to turn the power off.

❷ 🎧 (headphones) jack
Connect stereo headphones here. Speaker sound will be disconnected. If your stereo headphones have a stereo miniplug use an optional plug adaptor. To hear the sound from the speakers disconnect the headphones.

❸ Indicator window

Ⓐ Program indicator

Ⓑ SPACE SOUND indicator

Ⓒ ⏻ (standby) indicator and Remote control detector
Lights up when the TV is turned off with the Remote Commander. When any of the buttons on the Remote Commander is pressed this lamp blinks.

Ⓓ Zweiton/STEREO indicators
When a dual-sound program is received. A or B lights up.
When a stereo program is received both indicators light up.

❹ PROGR (program) select buttons
Press either + or – to select a preset program (from positions 1 through 30). Press + for higher numbered programs and – for lower numbered programs. Programs will be changed continuously in sequence. The selected program number will appear on the program indicator.

❺ AFT (automatic fine tuning) ON button
When the AFT circuit activates the indicator illuminates.
Press the AFT ON button to restore the AFT on the channel which has been fine-tuned manually with the FINE buttons. After the automatic programing is finished. or after a station is tuned and memorized in the manual programing system the AFT circuit will automatically reactivate.

❻ SPACE SOUND button
Press to get special acoustic effects (for example more presence). The SPACE SOUND indicator will illuminate. To disengage press it again.

❼ FINE (fine tuning) buttons
Keep either + or – depressed to get a clear picture for each unsatisfactory channel. The AFT circuit will be automatically deactivated.

SECTION 2
DISASSEMBLY

2-1. REAR COVER REMOVAL

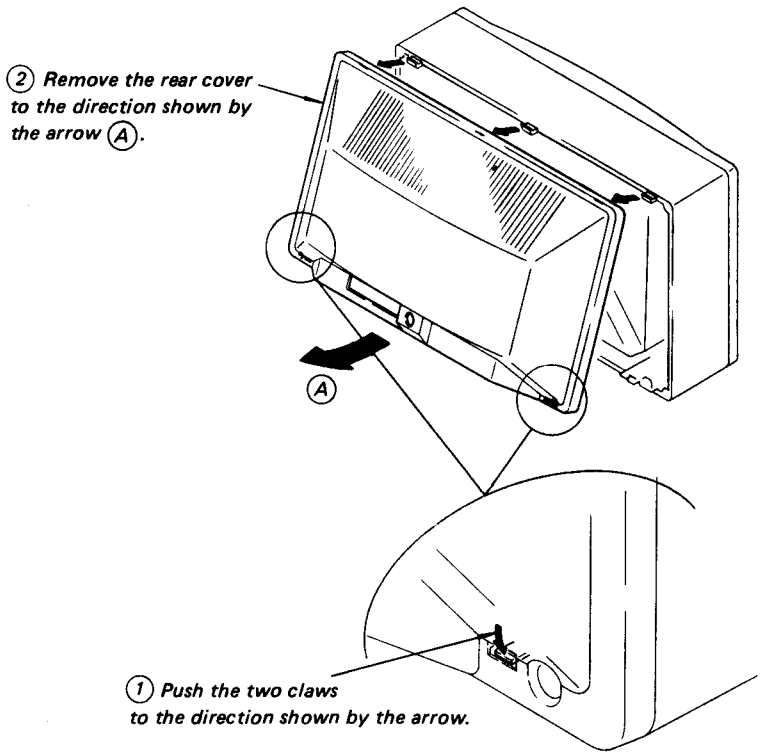

2-2. CONTROL BLOCK ASS'Y REMOVAL

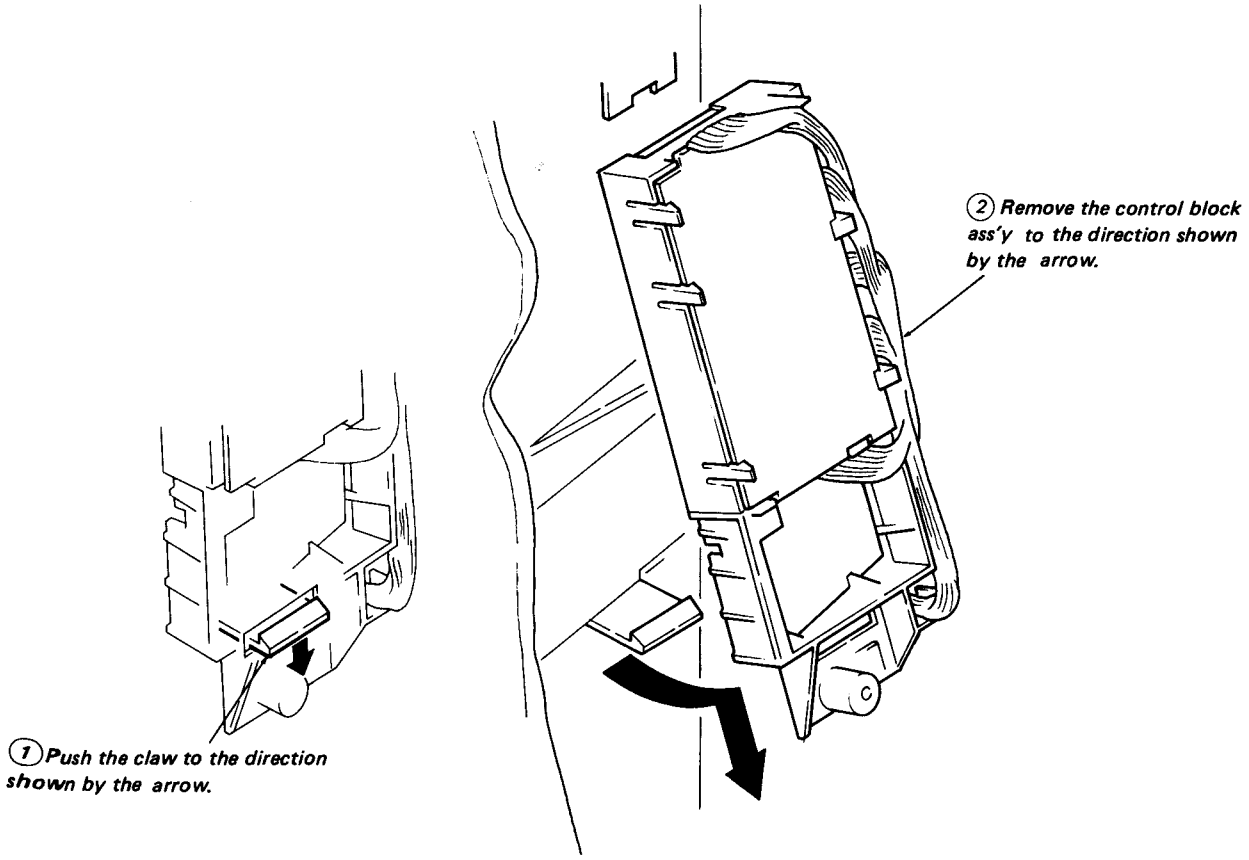

2-3. PICTURE TUBE REMOVAL

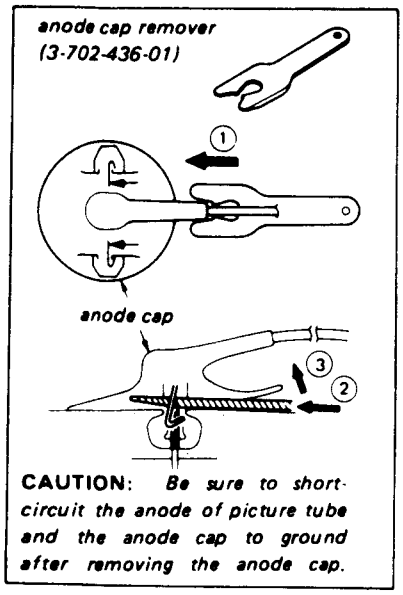

CAUTION: *Be sure to short-circuit the anode of picture tube and the anode cap to ground after removing the anode cap.*

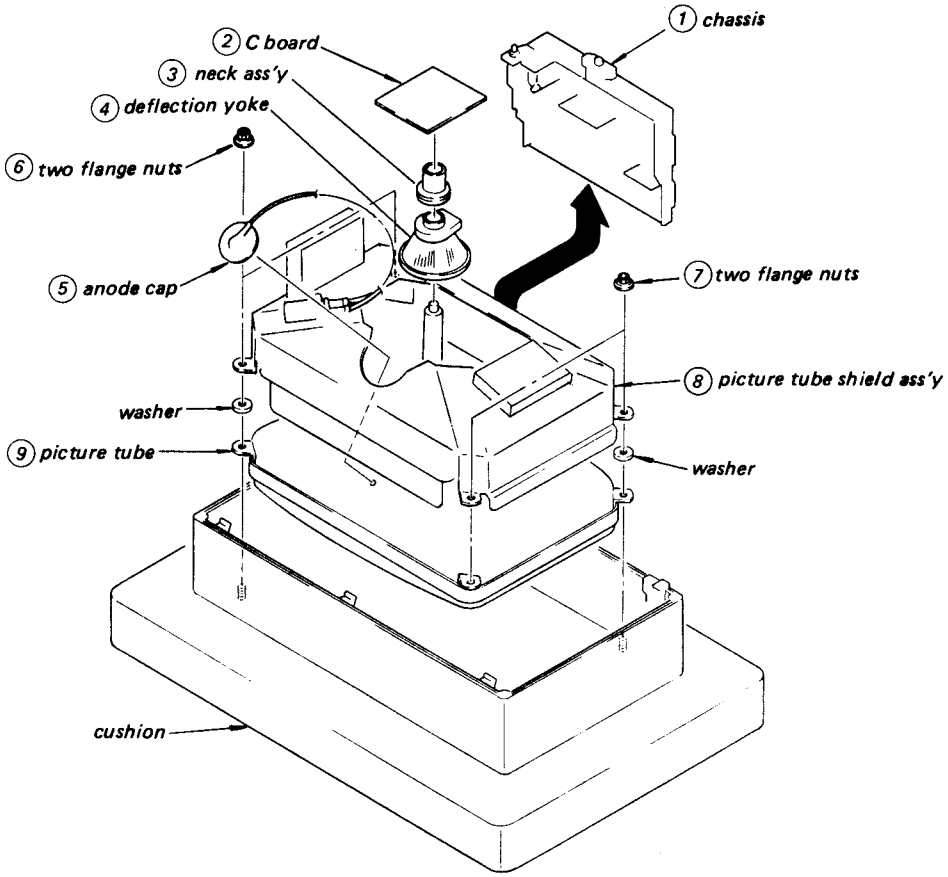

2-4. D BOARD REMOVAL

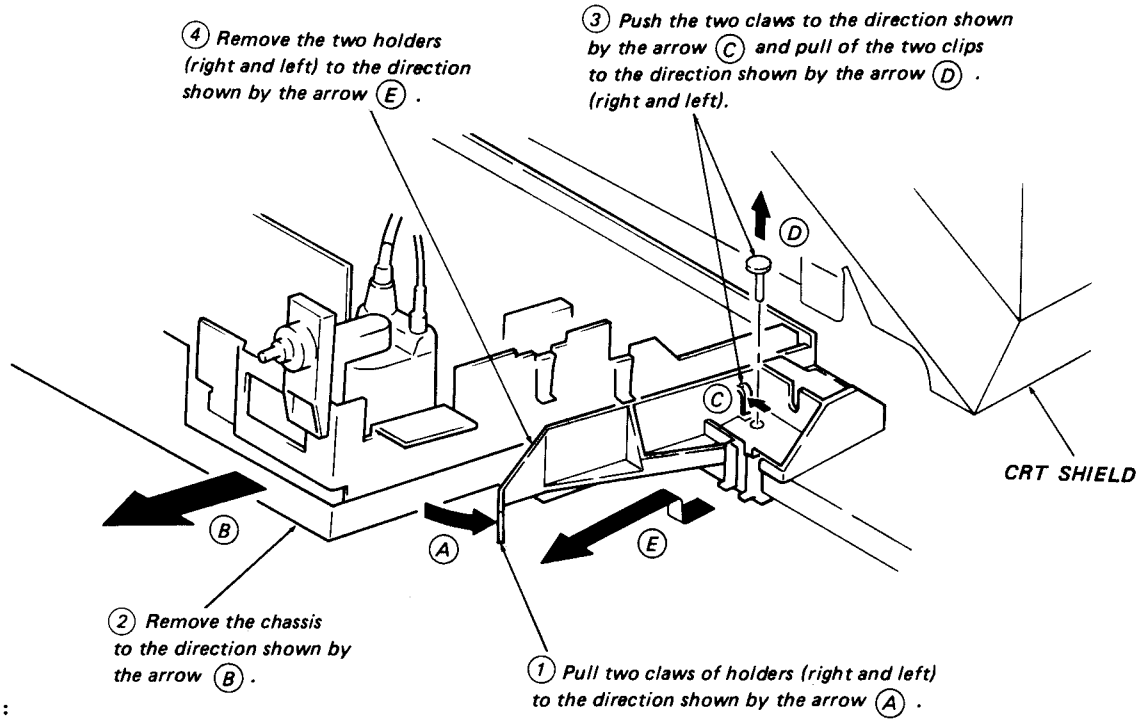

NOTE:
Picture tube replacement procedure:
Before replacing picture tube, remove D Board as described above.

SECTION 3
OPK-303 ATTACHING

Before installing the adaptor, unplug the set from the wall outlet.

1. Unscrew and remove the rear panel.
2. Unfasten the screws and pull out the main D board.
3. Attach the OPK-303 (TELETEXT ADAPTOR) on the set.

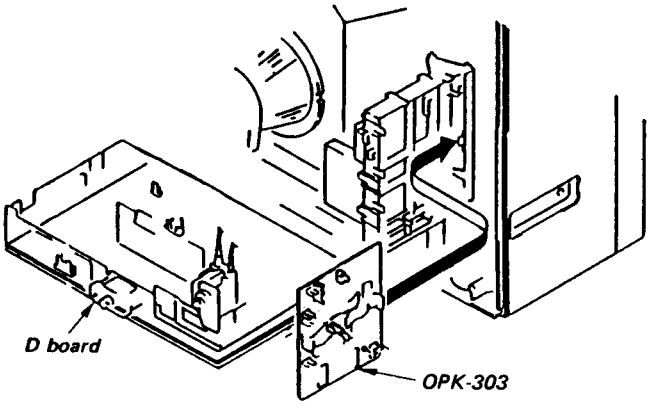

4. Connect to the reserve terminals as the connector.
   Connected terminals are coloures red. (except D-24)

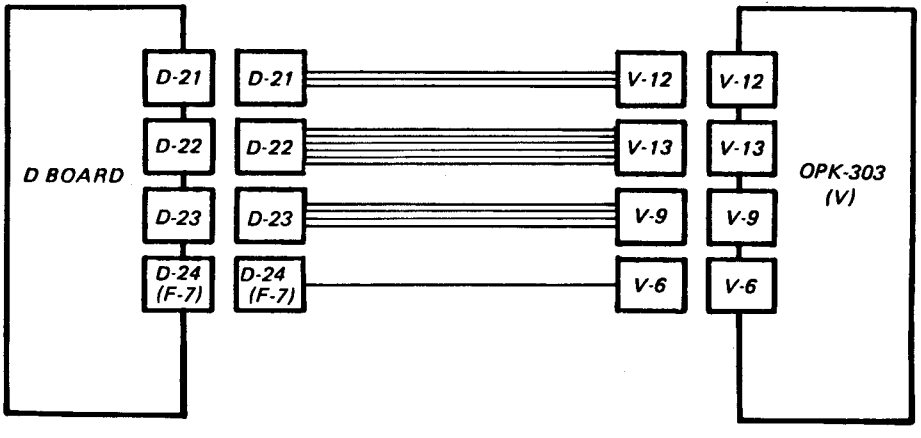

5. 6.0MHz ADJUSTMENT
   5-1. Connect a 100μF 16V chemical capacitor between pin (27) of IC001 and ground.
   5-2. Connect frequency counter across pin (17) of IC001 and ground.
   5-3. Adjust CT001 for 6.0MHz ± 2.0kHz out the frequency counter.
   5-4. Reconnect a chemical capacitor from IC001.
6. Attach the rear panel.

SECTION 4
SET-UP ADJUSTMENTS

The following adjustments should be made when a complete realignment is required or a new picture tube is installed. These adjustments should be performed with rated power supply voltage unless otherwise noted.

Controls and switch should be set as follows unless otherwise noted:

◑(picture) button . . . . . 80% (or normal by commander.) (Press ◑ + button)

☼(brightness) control . . . . . CENTER CLICK Position

Perform the adjustments in order as follows:

1. Beam Landing
2. Convergence
3. G2 and White Balance
4. Focus (RV902)
5. V. CENT Adjustment

Note: Test Equipment Required.
1. Color-bar/Pattern Genertator
2. Degausser

4-1. BEAM LANDING

Preparation:
- Feed in the white pattern.
- Before starting, degauss the entire screen.

1. Loosen deflection yoke screw.
2. Position neck ass'y as shown in Fig. 3-1.
3. Adjust purity control as shown in Fig. 3-2.
4. Slide deflection yoke as far forward as it will go.
5. Turn the raster signal of the pattern generator to red.
6. Adjust purity control to center vertical red band as shown in Fig. 3-3.
7. Slide deflection yoke back for a uniform red screen.
8. Check green and blue rasters for uniformity by performing the same way as steps 5,6 and 7.
9. Tighten the deflection yoke screw.
10. Check if mislanding appears at corners a – d as shown in Fig. 3-4. If mislanding is observed, correct it as shown in Fig. 3-4.
11. Confirm that beam landing is correct when the receiver is faced in all directions.

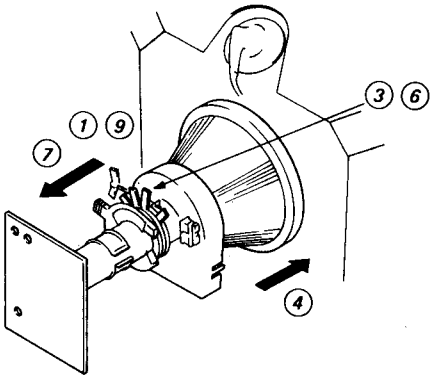

Note: The circled numbers (① – ⑨) show above steps.

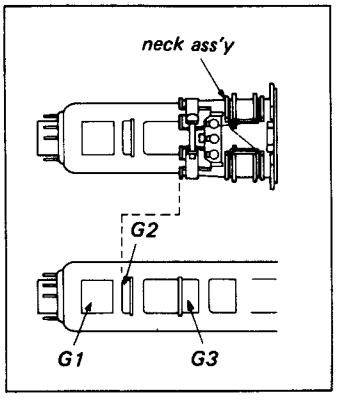

Fig. 3-1

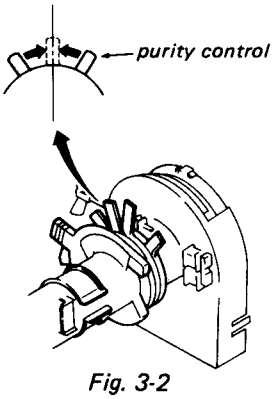

Fig. 3-2

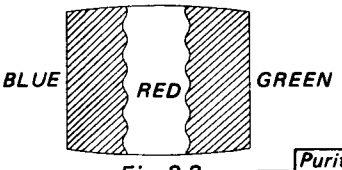

Fig. 3-3

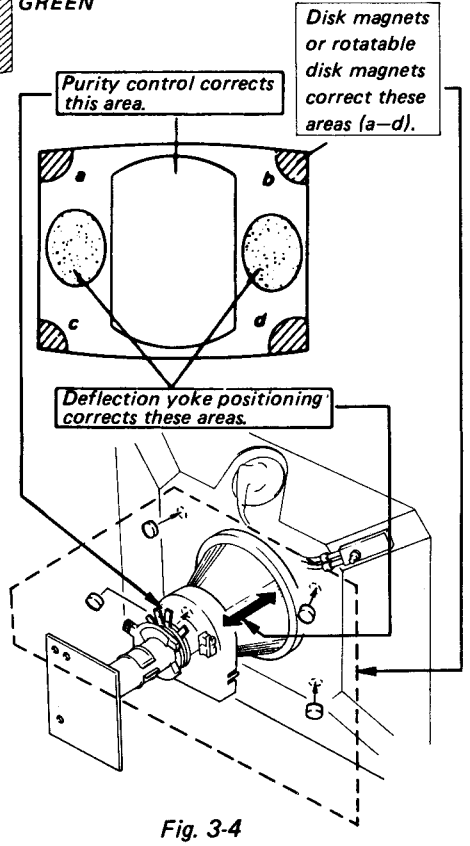

Fig. 3-4

4-2. CONVERGENCE

Preparation:

- Before starting this adjustment, perform FOCUS, H. SIZE and V. SIZE adjustments.
- Turn BRIGHTNESS control fully counterclockwise.
- Feed in a dot signal.

(1) Horizontal and Vertical Static Convergence

If blue dot does not coincide with red and green dots, perform following steps.

Move BMC magnet (a) to correct insufficient H. static convergence.

Rotate BMC magnet (b) to correct insufficient V. static convergence.

In either case, repeat Beam Landing Adjustment.

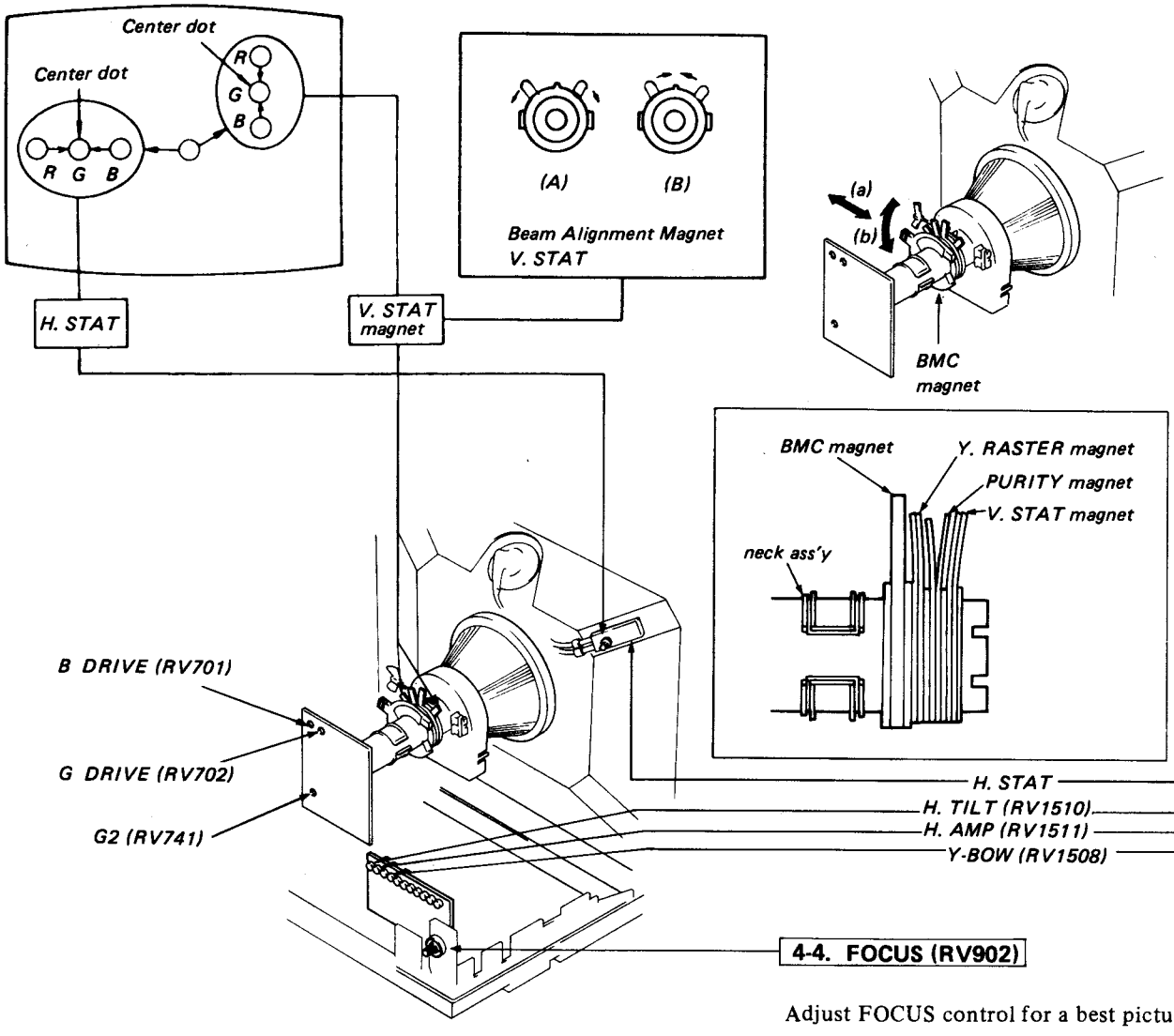

4-4. FOCUS (RV902)

Adjust FOCUS control for a best picture.

4-3. G2 and WHITE BALANCE

(1) G2 ADJ.

1. Feed in a dot signal.
2. Set PIC CONTROL, BRT VR's to minimum.
3. Connect external power supply 170V DC to R, G, B cathode.
4. Adjust RV741 (G2) to the point where retrace glows faintly.

(2) W/B ADJ.

1. Feed in a color bar.
2. Set: PIC, BRT: MAX
   COL : MIN
3. Adjust B, G DRIVE VR's to get white balance.
4. Set: PIC, COL: MIN
   BRT : CENTER
   Adjust SUB BRT (RV302) to the point where the arrow indicates.

(2) Dynamic Convergence
[Misconvergence at Both Sides of Screen.]

1. Set RV1511 and RV1510 to mechanical center.
2. Adjust H. STAT control so that green and blue dots coincide at center of screen.
3. Adjust RV1510 so that X1 is equal to X3.
4. Adjust RV1511 so that X2 is equal to X3.
5. Repeat above Steps 1 through 4 two or three times.

[Top and Bottom Misconvergence]

(A) Y. BOW (RV1508)

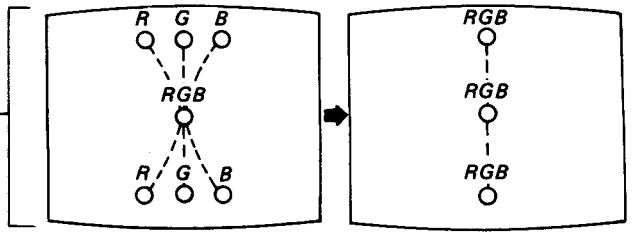

(B) H. TILT (RV1510)

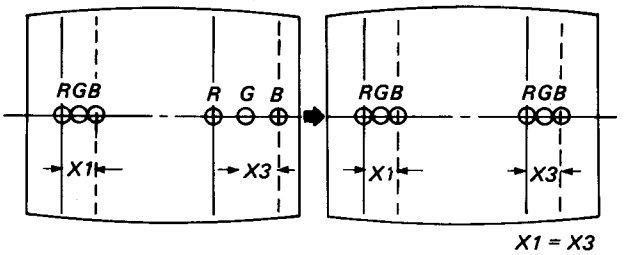

(C) H. AMP (RV1511)

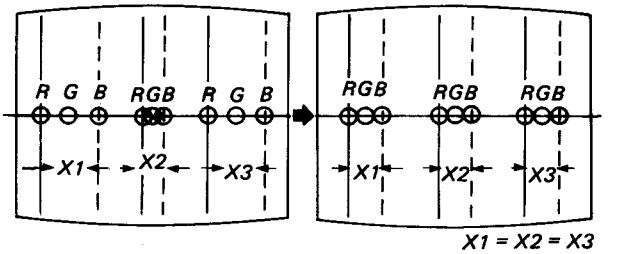

(D) Screen-corner Convergence

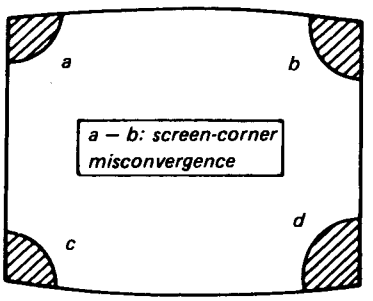

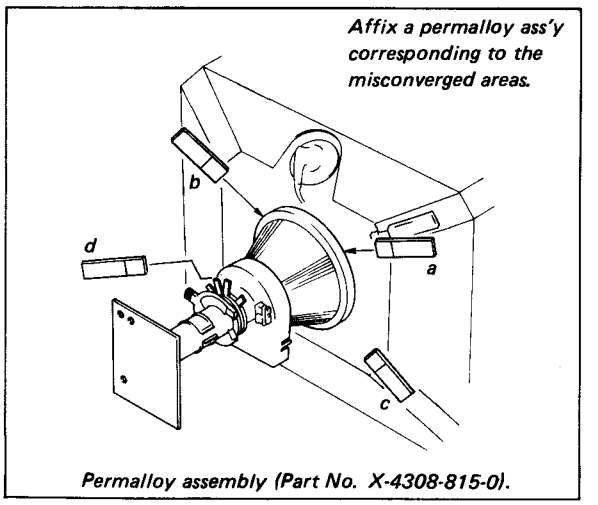

4-5. V. CENT ADJUSTMENT

1. Before starting, perform H. SIZE, V. SIZE, V. LINE VR at center position.
2. Receive monoscope signal.
3. Adjust Y. RASTER magnet so that monoscope pattern is positioned at the center of screen.

Note: The opening angle of Y. RASTER magnet should be within 60°.

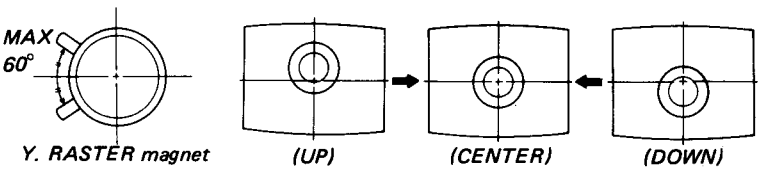

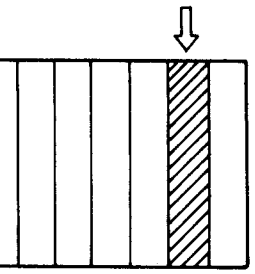

SIMPLE ADJUSTMENT METHOD

1. Receive an air signal.
2. Set PIC, BRT, COL to MAX.
3. Set B, G DRIVE VR's to mechanical center.
4. Turn G2 VR fully to the left and right and adjust to the center of the range over which color does not change.

KV-27XSD
RM-635

SECTION 5
BLOCK DIAGRAM

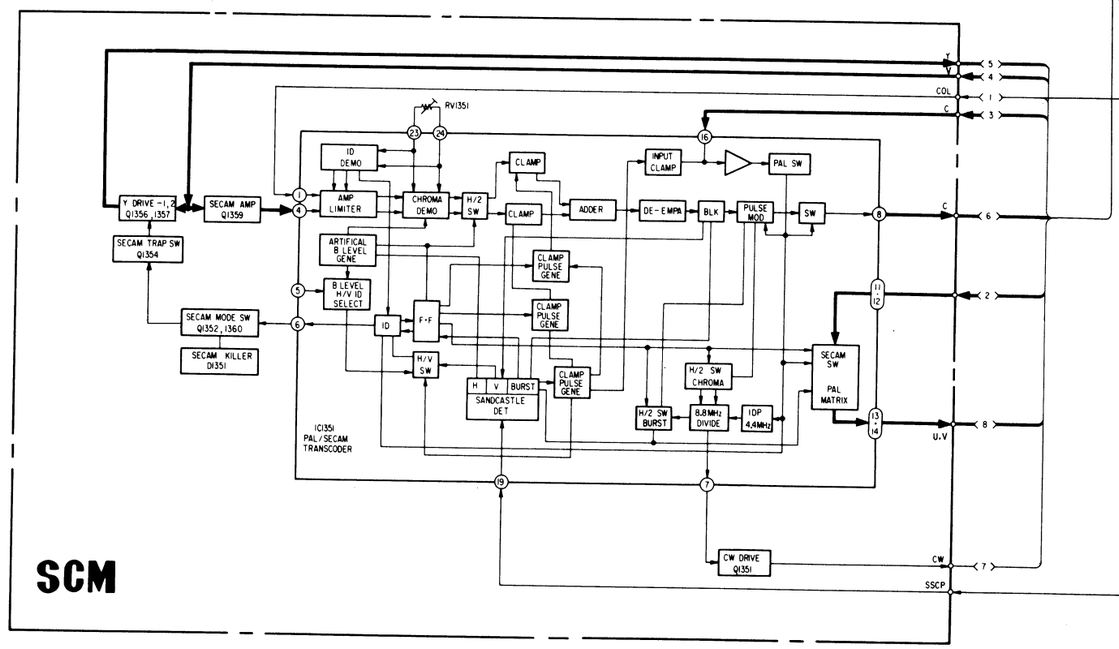

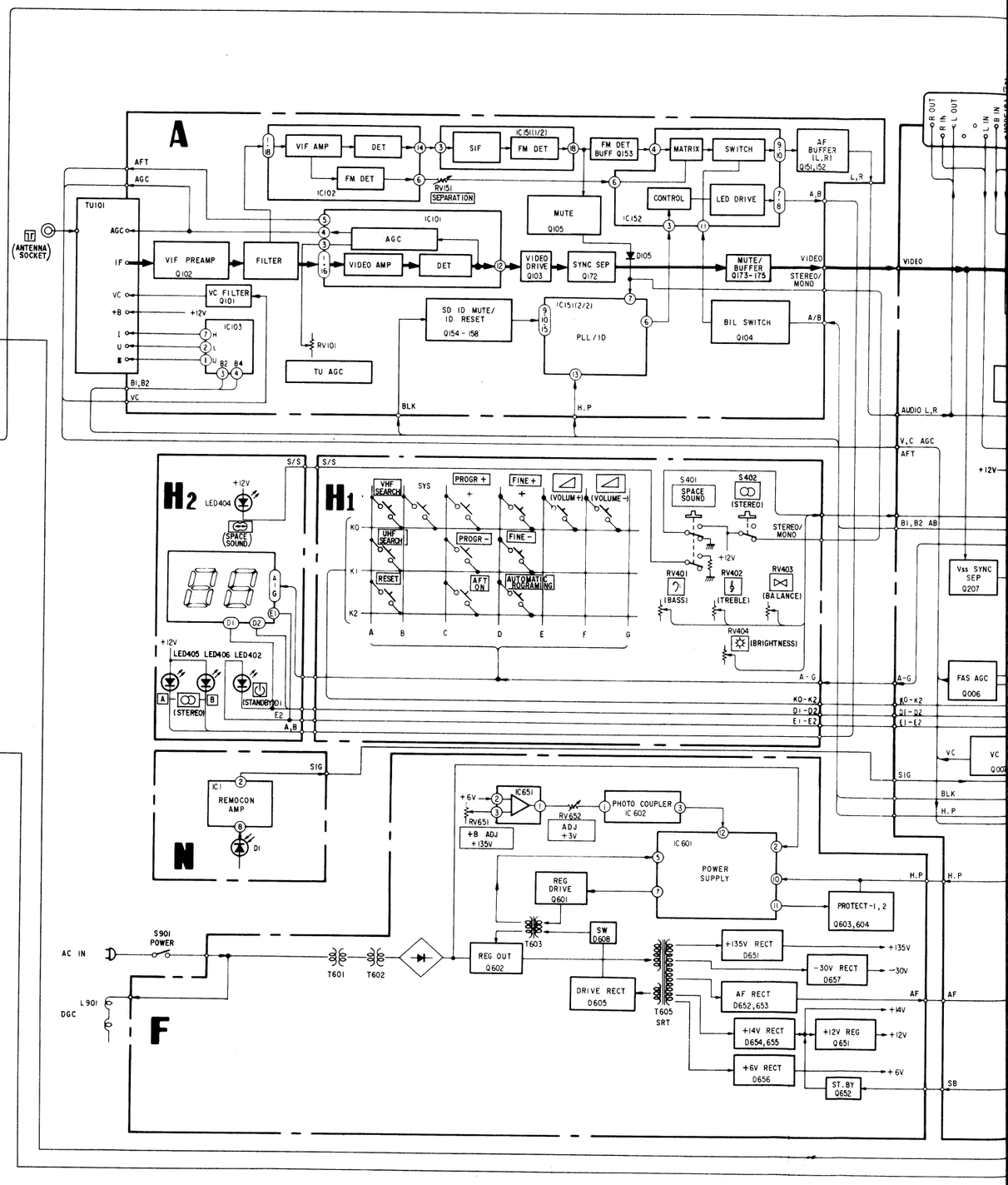

KV-27XSD RM-635

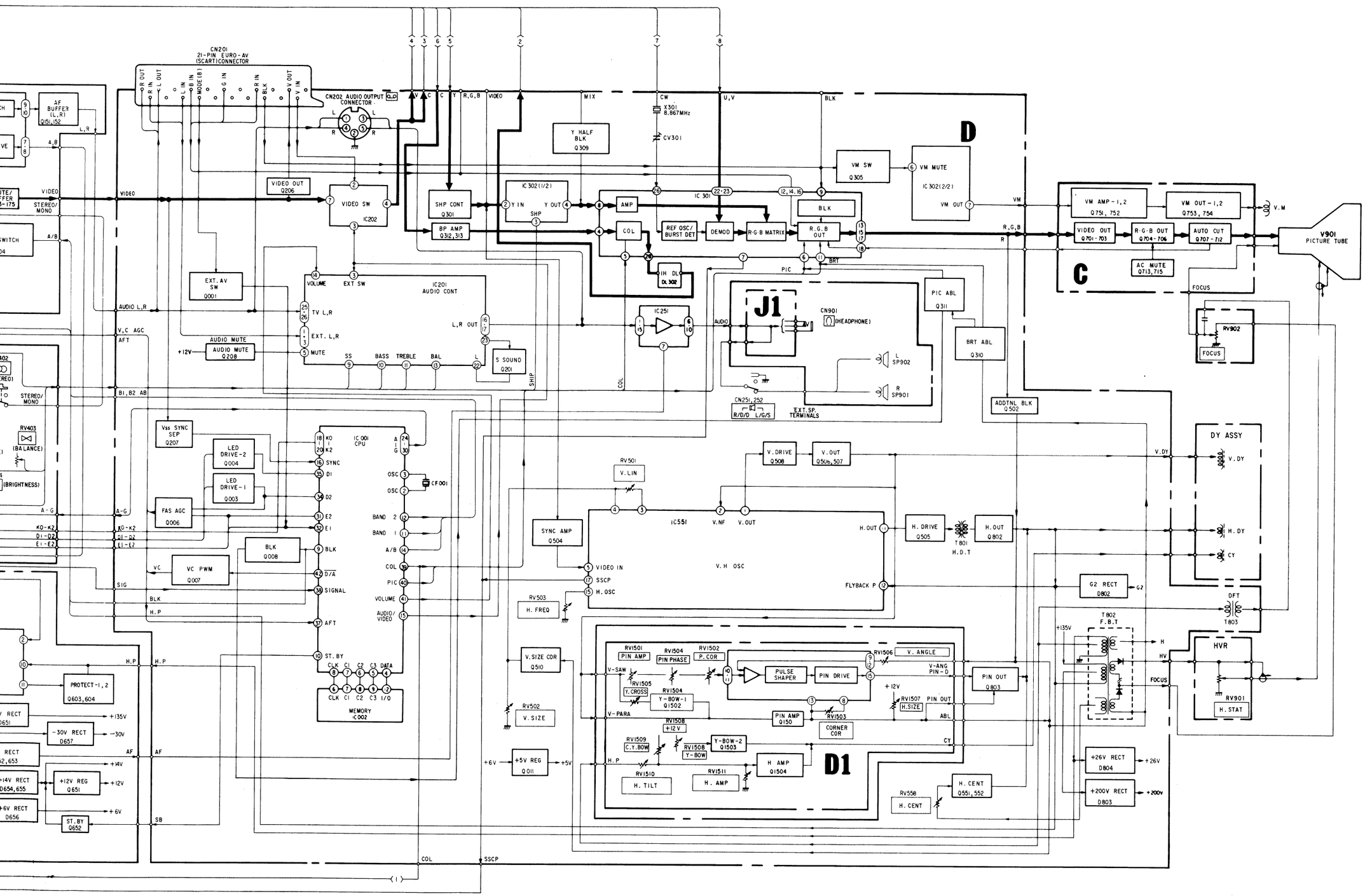

SECTION 6
EXPLODED VIEWS

NOTE:
- Items with no part number and no description are not stocked because they are seldom required for routine service.
- The construction parts of an assembled part are indicated with a collation number in the remark column.
- Items marked " * " are not stocked since they are seldom required for routine service. Some delay should be anticipated when ordering these items.

The components identified by shading and mark ⚠ are critical for safety. Replace only with part number specified.

6-1. CABINET

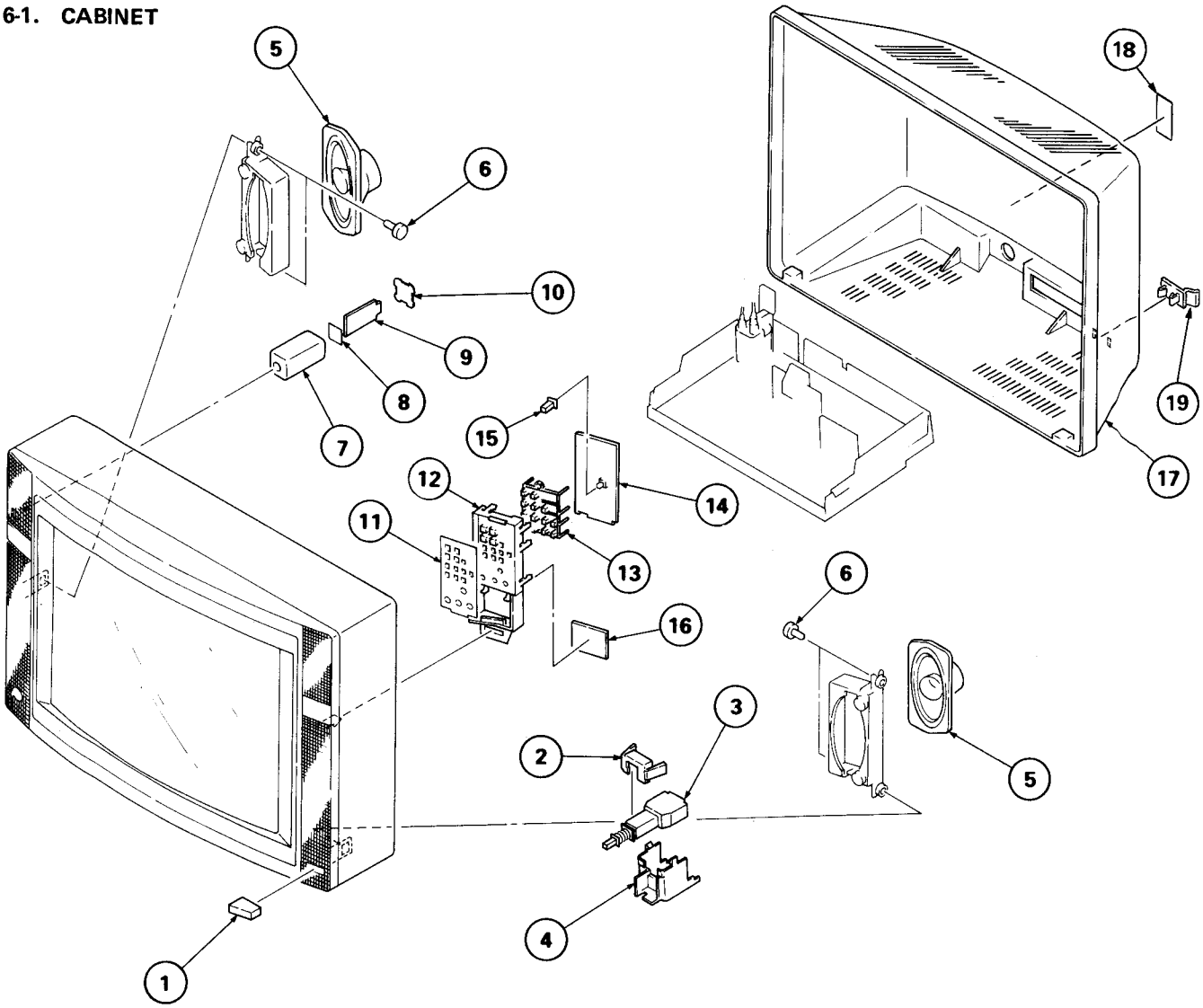

No.	Part No.	Description	Remark
1	4-381-502-01	BUTTON, POWER (FOR GRAY)	
	4-381-502-11	BUTTON, POWER (FOR BLACK)	
2	*4-381-501-01	HOLDER, POWER SW	
3	⚠1-554-762-41	SWITCH, PUSH (AC POWER)(1 KEY)	
4	*4-373-216-01	CAP, INSULATING, POWER SWITCH	
5	1-503-642-11	SPEAKER	
6	4-373-234-01	CLIP	
7	*4-342-117-00	CASE, SHIELD (MAIN), R	
8	*4-333-624-00	FILM (N), SPECIAL	
9	*1-611-717-11	N BOARD	
10	*4-342-118-00	LID, SHIELD CASE, R	
11	*4-373-212-03	LABEL, CONTROL	
12	*4-381-520-01	PANEL, CONTROL	
13	4-373-213-01	BUTTON, MULTI	
14	*1-619-358-11	H1 BOARD	
15	4-361-938-00	PUSH BUTTON (A)	
16	*1-619-359-11	H2 BOARD	
17	4-373-229-01	COVER, REAR	
18	*4-381-527-01	LABEL, COMBINATION	
19	4-329-127-00	CLAMP, CORD	

6-2. CRT

▲: TA,BV4x12 7-685-661-14

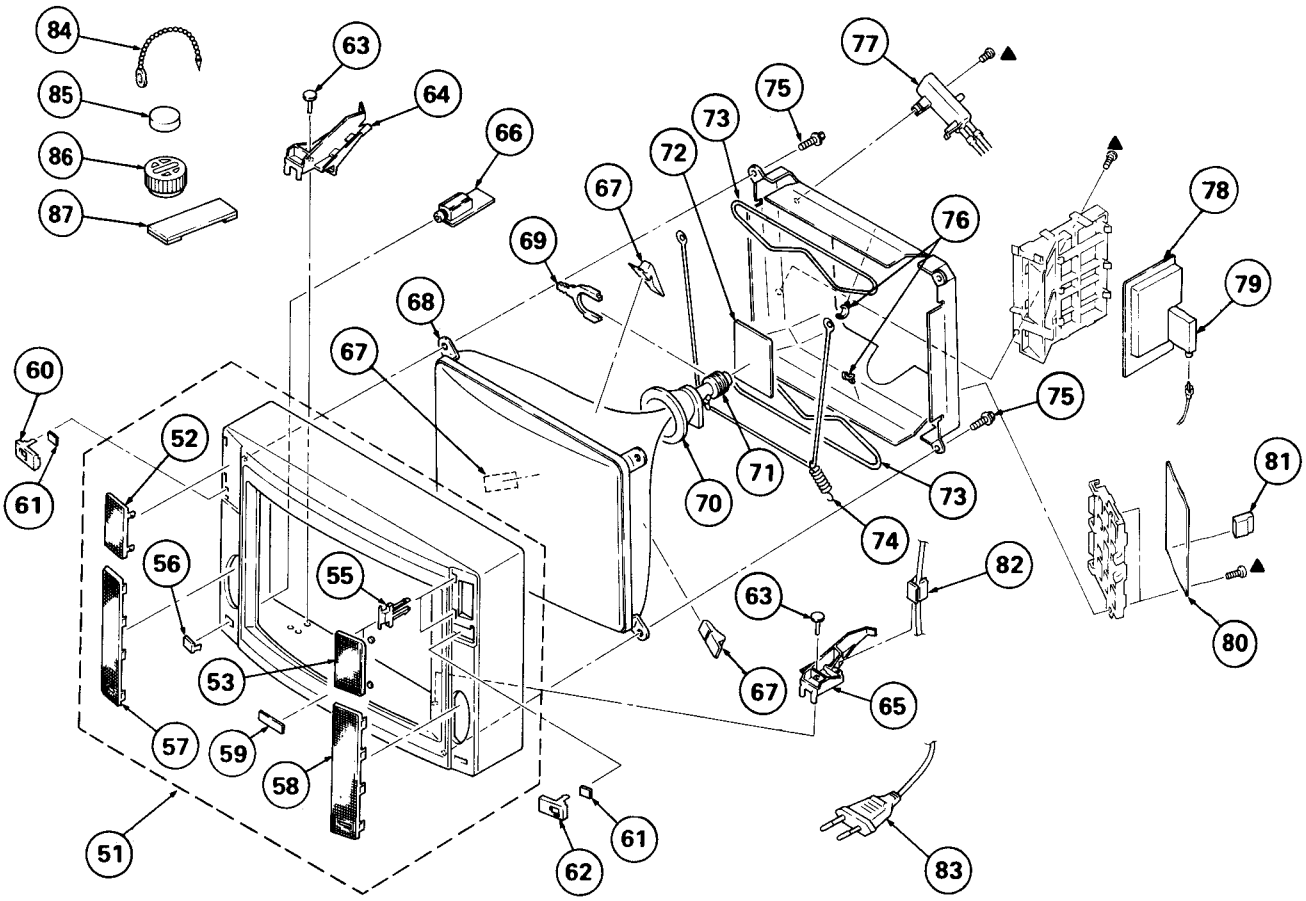

No.	Part No.	Description	Remark
51	X-4381-511-1	CABINET ASSY (FOR GRAY)	52,53-59
	X-4381-511-2	CABINET ASSY (FOR BLACK)	52,53-59
52	X-4381-510-1	LID ASSY (FOR GRAY)	
	X-4381-510-2	LID ASSY (FOR BLACK)	
53	X-4381-509-1	DOOR ASSY (FOR GRAY)	
	X-4381-509-2	DOOR ASSY (FOR BLACK)	
55	3-703-035-11	SHAFT, LID	
56	4-381-503-01	PLATE, K.H.	
57	4-381-511-01	PLATE (C), ORNAMENTAL (FOR GRAY)	
	4-381-511-11	PLATE (C), ORNAMENTAL (FOR BLACK)	
58	4-381-512-01	PLATE (D), ORNAMENTAL (FOR GRAY)	
	4-381-512-11	PLATE (D), ORNAMENTAL (FOR BLACK)	
59	4-374-115-01	EMBLEM, SONY	
60	X-4381-506-1	PLATE ASSY, IR (FOR GRAY)	
	X-4381-506-2	PLATE ASSY, IR (FOR BLACK)	
61	4-381-515-01	WINDOW, ORNAMENTAL	
62	4-381-514-01	PLATE, ZI (FOR GRAY)	
	4-381-514-11	PLATE, ZI (FOR BLACK)	
63	4-373-234-01	CLIP	
64	*4-373-228-01	HOLDER (C) (LEFT)	
65	*4-373-227-01	HOLDER (C) (RIGHT)	
66	*1-618-883-11	J1 BOARD	
67	3-703-003-00	SPACER, DY	
68	⚠8-736-653-05	CRT (A64JKJ60X)	
69	1-452-146-21	MAGNET, BMC	
70	⚠1-451-255-31	DEFLECTION YOKE (SY-164)	
71	⚠1-452-391-21	NECK ASSY, CRT (NA305)	
72	*A-1330-712-A	C BOARD, COMPLETE	
73	⚠1-426-278-11	COIL, DEMAGNETIZATION	
74	4-303-774-XX	SPRING	
75	4-374-494-01	SCREW, SPECIAL	
76	*4-371-629-01	STOPPER, WIRE	
77	⚠1-220-544-11	RESISTOR ASSY, HIGH-VOLTAGE	
78	*A-1296-108-A	A BOARD, SUB, COMPLETE	
79	⚠1-463-577-11	TUNER, ET (BT-883A)	
80	*A-1245-313-A	F BOARD, SUB, COMPLETE	
81	*4-375-709-01	COVER, FUSE	
82	⚠4-022-115-01	HOLDER, AC CORD	
83	⚠1-551-270-31	CORD, POWER	
84	4-308-870-00	CLIP, LEAD WIRE	
85	1-452-032-00	MAGNET, DISK; 10MM ø	
86	1-452-094-00	MAGNET, ROTATABLE DISK; 15MM ø	
87	X-4308-815-0	PERMALLOY ASSY, CONVERGENCE	

The components identified by shading and mark ⚠ are critical for safety. Replace only with part number specified.

6-3. CHASSIS

■: TA,BV3x8 7-685-646-71

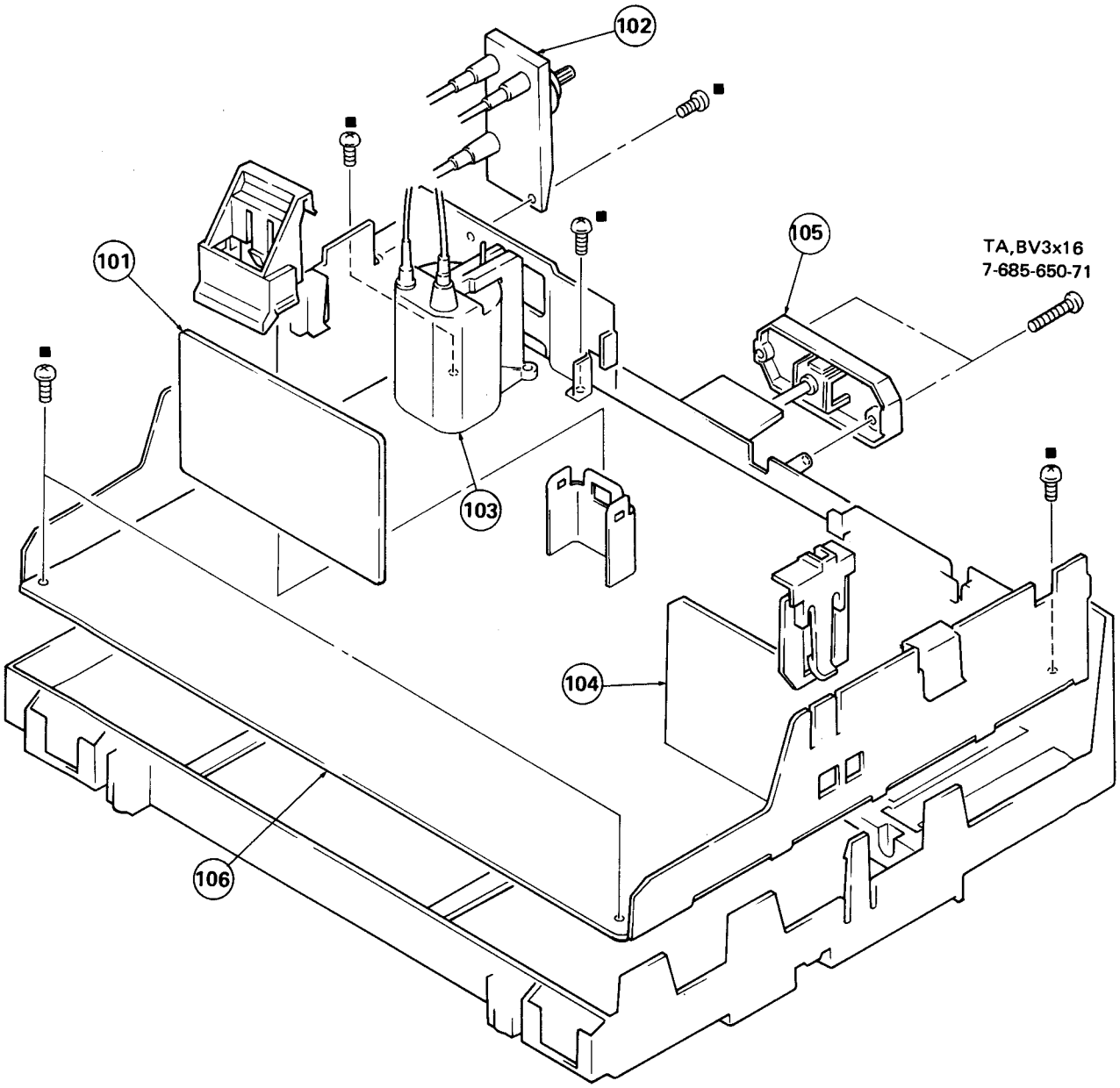

No.	Part No.	Description	Remark	No.	Part No.	Description	Remark
101	*A-1340-817-A	D1 BOARD, COMPLETE		104	*A-1135-316-A	SCM BOARD, COMPLETE	
102	⚠1-237-280-11	RESISTOR ASSY, HIGH-VOLTAGE		105	⚠1-536-817-31	TERMINAL BOARD ASSY, ANTENNA	
103	⚠1-439-332-42	TRANSFORMER ASSY, FLYBACK		106	*A-1345-618-A	D BOARD, SUB, COMPLETE	

The components identified by shading and mark ⚠ are critical for safety. Replace only with part number specified.

SCM F

SECTION 7
ELECTRICAL PARTS LIST

NOTE:

The components identified by shading and mark ⚠ are critical for safety. Replace only with part number specified.

• Items marked " * " are not stocked since they are seldom required for routine service. Some delay should be anticipated when ordering these items.

When indicating parts by reference number, please include the board name.

• All variable and adjustable resistors have characteristic curve B, unless otherwise noted.

CAPACITORS
• MF : μF, PF : μμF

RESISTORS
• All resistors are in ohms
• F : nonflammable

COILS
• MMH : mH, UH : μH

Ref.No.	Part No.	Description				Remark
	*A-1135-316-A	SCM BOARD, COMPLETE **********				
	*1-562-370-21	CONNECTOR, BOARD TO BOARD 18P				
		CAPACITOR				
C1351	1-104-069-00	POLYSTYRENE	470PF	5%	50V	
C1352	1-101-880-00	CERAMIC	47PF	5%	50V	
C1353	1-110-192-81	MYLAR	0.015MF	10%	400V	
C1354	1-123-369-00	ELECT	4.7MF	20%	25V	
C1355	1-102-074-00	CERAMIC	0.001MF	10%	50V	
C1356	1-123-380-00	ELECT	1MF	20%	50V	
C1357	1-102-074-00	CERAMIC	0.001MF	10%	50V	
C1358	1-110-182-81	MYLAR	0.022MF	10%	250V	
C1359	1-101-004-00	CERAMIC	0.01MF		50V	
C1360	1-101-004-00	CERAMIC	0.01MF		50V	
C1361	1-123-332-00	ELECT	47MF	20%	16V	
C1362	1-102-953-00	CERAMIC	18PF	5%	50V	
C1363	1-102-953-00	CERAMIC	18PF	5%	50V	
C1364	1-102-074-00	CERAMIC	0.001MF	10%	50V	
C1366	1-101-006-00	CERAMIC	0.047MF		50V	
C1367	1-123-356-00	ELECT	10MF	20%	16V	
C1368	1-102-965-00	CERAMIC	39PF	5%	50V	
C1369	1-102-824-21	CERAMIC	470PF	5%	50V	
C1370	1-110-175-81	MYLAR	0.1MF	10%	100V	
C1371	1-110-175-81	MYLAR	0.1MF	10%	100V	
C1372	1-102-736-00	CERAMIC	150PF	5%	50V	
C1373	1-101-004-00	CERAMIC	0.01MF		50V	
C1374	1-123-356-00	ELECT	10MF	20%	16V	
C1375	1-123-318-00	ELECT	33MF	20%	16V	
C1376	1-161-317-00	CERAMIC	330PF	10%	50V	
C1378	1-110-182-81	MYLAR	0.022MF	10%	250V	
		DIODE				
D1351	8-719-026-11	DIODE 1T261				
		IC				
IC1351	8-759-922-69	IC TDA3590A-N9				
		COIL				
L1351	1-404-497-00	COIL				
L1352	1-404-496-00	COIL				
L1353	1-408-408-00	MICRO INDUCTOR 8.2UH				
L1354	1-404-498-00	COIL				
		TRANSISTOR				
Q1351	8-729-178-54	TRANSISTOR 2SC2785				
Q1352	8-729-117-54	TRANSISTOR 2SA1175				
Q1354	8-729-178-54	TRANSISTOR 2SC2785				
Q1356	8-729-117-54	TRANSISTOR 2SA1175				
Q1357	8-729-178-54	TRANSISTOR 2SC2785				
Q1359	8-729-178-54	TRANSISTOR 2SC2785				
Q1360	8-729-178-54	TRANSISTOR 2SC2785				
		RESISTOR				
R1351	1-215-738-91	METAL	1K	5%	1/6W	
R1352	1-215-802-91	METAL	470K	5%	1/6W	
R1353	1-215-778-91	METAL	47K	5%	1/6W	
R1354	1-215-706-91	METAL	47	5%	1/6W	
R1355	1-215-750-91	METAL	3.3K	5%	1/6W	
R1356	1-215-756-91	METAL	5.6K	5%	1/6W	
R1357	1-215-748-91	METAL	2.7K	5%	1/6W	
R1361	1-215-798-91	METAL	330K	5%	1/6W	
R1364	1-215-746-91	METAL	2.2K	5%	1/6W	
R1365	1-215-762-91	METAL	10K	5%	1/6W	
R1367	1-215-778-91	METAL	47K	5%	1/6W	
R1368	1-215-738-91	METAL	1K	5%	1/6W	
R1371	1-215-774-91	METAL	33K	5%	1/6W	
R1372	1-215-716-91	METAL	120	5%	1/6W	
R1373	1-215-738-91	METAL	1K	5%	1/6W	
R1374	1-215-746-91	METAL	2.2K	5%	1/6W	
R1375	1-215-720-91	METAL	180	5%	1/6W	
R1380	1-215-770-91	METAL	22K	5%	1/6W	
R1382	1-215-158-00	METAL	1.8K	5%	1/4W	
R1383	1-215-746-91	METAL	2.2K	5%	1/6W	
R1384	1-215-752-91	METAL	3.9K	5%	1/6W	
R1385	1-215-738-91	METAL	1K	5%	1/6W	
R1386	1-215-738-91	METAL	1K	5%	1/6W	
R1387	1-215-200-00	METAL	100K	5%	1/4W	
R1388	1-215-786-91	METAL	100K	5%	1/6W	
R1389	1-215-734-91	METAL	680	5%	1/6W	
R1390	1-215-734-91	METAL	680	5%	1/6W	
		VARIABLE RESISTOR				
RV1351	1-230-522-11	RES, ADJ, METAL GLAZE 4.7K				
	*A-1245-313-A	F BOARD, SUB, COMPLETE **********				
		CAPACITOR				
C601	⚠1-108-745-62	MYLAR	0.22MF	20%	300V	
C602	⚠1-108-745-62	MYLAR	0.22MF	20%	300V	
C603	⚠1-162-578-51	CERAMIC	0.0047MF	20%	400V	
C604	⚠1-162-578-51	CERAMIC	0.0047MF	20%	400V	
C605	⚠1-162-578-51	CERAMIC	0.0047MF	20%	400V	
C606	⚠1-162-578-51	CERAMIC	0.0047MF	20%	400V	
C607	⚠1-161-964-61	CERAMIC	0.0047MF		250V	
C608	⚠1-161-964-61	CERAMIC	0.0047MF		250V	
C609	⚠1-161-964-61	CERAMIC	0.0047MF		250V	
C610	1-125-318-00	ELECT(BLOCK)	220MF	20%	400V	
C611	1-110-175-81	MYLAR	0.1MF	10%	100V	
C612	1-130-022-00	FILM	0.0022MF	5%	50V	
C613	1-123-356-00	ELECT	10MF	20%	16V	

Ref.No.	Part No.	Description			Remark
C614	1-123-356-00	ELECT	10MF	20%	25V
C615	1-102-106-00	CERAMIC	100PF	10%	50V
C616	1-123-369-00	ELECT	4.7MF	20%	25V
C617	1-110-186-81	MYLAR	0.0047MF	10%	400V
C618	1-102-030-00	CERAMIC	330PF	10%	500V
C619	1-110-182-81	MYLAR	0.022MF	10%	250V
C620	1-123-332-00	ELECT	47MF	20%	16V
C621	1-136-065-00	FILM	0.0027MF	3%	2KV
C622	1-123-385-00	ELECT	22MF	20%	100V
C623	1-161-973-00	CERAMIC	220PF	10%	400V
C624	1-161-973-00	CERAMIC	220PF	10%	400V
C625	1-123-379-00	ELECT	0.47MF	20%	50V
C626	1-123-381-00	ELECT	2.2MF	20%	50V
C627	1-123-380-00	ELECT	1MF	20%	50V
C628	1-108-618-91	MYLAR	0.0022MF	10%	100V
C632	1-102-002-00	CERAMIC	680PF	10%	500V
C633	⚠1-108-745-62	MYLAR	0.22MF	20%	300V
C634	1-110-175-81	MYLAR	0.1MF	10%	100V
C651	1-102-155-00	CERAMIC	330PF	20%	2KV
C652	1-124-347-00	ELECT	100MF	20%	160V
C653	1-123-364-00	ELECT	1000MF	20%	50V
C654	1-123-606-00	ELECT	1000MF	20%	25V
C655	1-123-334-00	ELECT	220MF	20%	25V
C656	1-102-038-00	CERAMIC	0.001MF		500V
C656A	1-102-038-00	CERAMIC	0.001MF		500V
C658	1-123-332-00	ELECT	47MF	20%	16V
C659	1-102-112-00	CERAMIC	330PF	10%	50V
C660	1-123-356-00	ELECT	10MF	20%	50V
C661	1-123-333-00	ELECT	100MF	20%	16V
C662	1-110-190-81	MYLAR	0.01MF	10%	400V
C663	1-123-380-00	ELECT	1MF	20%	50V
C664	1-123-380-00	ELECT	1MF	20%	50V
C666	1-123-307-00	ELECT	100MF	20%	6.3V
C667	1-102-121-00	CERAMIC	0.0022MF	10%	50V
C668	1-110-190-81	MYLAR	0.01MF	10%	400V

DIODE

D601	⚠8-719-503-06	DIODE S3WB60Z	
D602	8-719-100-65	DIODE RD12E-B2	
D603	8-719-815-55	DIODE 1S1555	
D604	8-759-157-40	IC UPC574J	
D605	8-719-901-93	DIODE V19E	
D606	8-719-815-55	DIODE 1S1555	
D607	8-719-815-55	DIODE 1S1555	
D608	8-719-815-55	DIODE 1S1555	
D609	8-719-305-15	DIODE GH3F	
D651	8-719-928-08	DIODE ERD28-08	
D652	8-719-901-93	DIODE V19E	
D653	8-719-901-93	DIODE V19E	
D654	8-719-901-93	DIODE V19E	
D654A	8-719-924-06	DIODE ERC24-06S	
D655	8-719-901-93	DIODE V19E	
D655A	8-719-924-06	DIODE ERC24-06S	
D656	8-719-901-93	DIODE V19E	
D657	8-719-901-93	DIODE V19E	
D658	8-719-102-74	DIODE RD6.2E-N2	
D659	8-719-102-78	DIODE RD6.8E-N2	
D660	8-719-815-55	DIODE 1S1555	
D661	8-719-815-55	DIODE 1S1555	
D663	8-719-102-74	DIODE RD6.2E-N2	
D664	8-719-100-65	DIODE RD12E-B2	

CONNECTOR

F1	*1-506-348-XX	3P PLUG (L)	
F2	*1-508-765-00	3P PLUG (M)	
F3	*1-508-786-00	2P PLUG (M)	
F4	*1-508-765-00	3P PLUG (M)	
F6	*1-560-123-00	PLUG, CONNECTOR (2.5MM) 3P	
F7	*1-564-883-11	PLUG, CONNECTOR 6P	

FUSE

F601	⚠1-532-350-11	FUSE, TIME-LAG 4A/250V	
	1-533-149-00	HOLDER, FUSE; F601	

IC

IC601	8-759-100-75	IC UPC1394C	
IC602	⚠8-719-800-82	DIODE TLP581	
IC651	8-759-145-58	IC UPC4558C	

COIL

L601	1-407-365-00	COIL, CHOKE	
L651	1-425-613-00	COIL, AIR-CORE, QF TYPE	
L652	1-459-442-00	COIL (WITH CORE)	

TRANSISTOR

Q601	8-729-195-82	TRANSISTOR 2SC2958	
Q602	8-729-301-00	TRANSISTOR 2SD1497-02	
	4-365-216-00	SPACER, MICA; Q602	
	*4-368-683-01	SPRING; Q602	
Q603	8-729-178-54	TRANSISTOR 2SC2785	
Q604	8-729-117-54	TRANSISTOR 2SA1175	
Q651	8-729-109-53	TRANSISTOR 2SD795A	
	*4-323-833-00	HEAT SINK, PIN OUT; Q651	
Q652	8-729-178-54	TRANSISTOR 2SC2785	

RESISTOR

R601	⚠1-217-328-11	WIREWOUND	2.7	10%	7W		F
R602	⚠1-244-945-91	CARBON	1M	5%	1/2W		
R603	⚠1-205-758-11	CEMENTED	100	10%	10W		F
R604	⚠1-247-289-11	CARBON	8.2M	5%	1W		
R605	1-215-798-91	METAL	330K	5%	1/6W		
R606	1-215-770-91	METAL	22K	5%	1/6W		
R608	1-215-746-91	METAL	2.2K	5%	1/6W		
R609	1-215-871-11	METAL OXIDE	2.2K	5%	1W		F
R611	1-215-776-91	METAL	39K	5%	1/6W		
R612	⚠1-215-904-51	METAL OXIDE	100K	5%	2W		F

The components identified by shading and mark ⚠ are critical for safety. Replace only with part number specified.

F N A

Ref.No.	Part No.	Description				Remark
R613	1-215-872-11	METAL OXIDE	3.3K	5%	1W	F
R614	1-216-458-11	METAL OXIDE	1.8K	5%	2W	F
R615	1-205-793-00	CEMENTED	30K	10%	10W	
R616	1-215-772-91	METAL	27K	5%	1/6W	
R621	1-215-762-91	METAL	10K	5%	1/6W	
R622	1-215-770-91	METAL	22K	5%	1/6W	
R623	1-215-162-00	METAL	2.7K	5%	1/4W	
R624	1-215-754-91	METAL	4.7K	5%	1/6W	
R625	1-215-786-91	METAL	100K	5%	1/6W	
R626	1-215-150-00	METAL	820	5%	1/4W	
R627	1-215-722-91	METAL	220	5%	1/6W	
R628	1-215-796-91	METAL	270K	5%	1/6W	
R629	1-215-758-91	METAL	6.8K	5%	1/6W	
R630	1-215-112-00	METAL	22	5%	1/4W	
R631	1-205-728-00	CEMENTED	47	10%	7W	
R632	1-217-192-00	WIREWOUND	0.22	10%	2W	F
R633	1-215-798-91	METAL	330K	5%	1/6W	
R634	1-215-800-91	METAL	390K	5%	1/6W	
R635	1-215-756-91	METAL	5.6K	5%	1/6W	
R636	1-215-803-91	METAL	510K	5%	1/6W	
R637	1-215-770-91	METAL	22K	5%	1/6W	
R638	1-215-747-91	METAL	2.4K	5%	1/6W	
R639	1-215-754-91	METAL	4.7K	5%	1/6W	
R640 ⚠	1-215-200-81	METAL	100K	5%	1/4W	
R641 ⚠	1-215-200-81	METAL	100K	5%	1/4W	
R651	1-216-455-11	METAL OXIDE	560	5%	2W	F
R652	1-216-430-11	METAL OXIDE	390	5%	1W	F
R653	1-215-754-91	METAL	4.7K	5%	1/6W	
R654	1-216-464-11	METAL OXIDE	18K	5%	2W	F
R657	1-215-698-91	METAL	22	5%	1/6W	
R659	1-215-865-11	METAL OXIDE	220	5%	1W	F
R660	1-216-370-11	METAL OXIDE	1.2	5%	2W	F
R662	1-215-776-91	METAL	39K	5%	1/6W	
R663	1-215-764-91	METAL	12K	5%	1/6W	
R664	1-215-200-00	METAL	100K	5%	1/4W	
R665	1-215-753-91	METAL	4.3K	5%	1/6W	
R666	1-215-144-00	METAL	470	5%	1/4W	
R667	1-215-126-81	METAL	82	5%	1/4W	
R668	1-215-778-91	METAL	47K	5%	1/6W	
R669	1-215-166-00	METAL	3.9K	5%	1/4W	
R670	1-215-746-91	METAL	2.2K	5%	1/6W	

VARIABLE RESISTOR

RV651	1-228-720-00	RES, ADJ, CERAMIC CARBON 1K
RV652	1-226-702-00	RES, ADJ, METAL GLAZE 2.2K

TRANSFORMER

T601 ⚠	1-421-758-11	TRANSFORMER, LINE FILTER (LFT)
T602 ⚠	1-421-592-11	TRANSFORMER, FERRITE
T603	1-437-079-00	TRANSFORMER, HORIZONTAL DRIVE
T605 ⚠	1-421-652-11	TRANSFORMER, FERRITE (SRT)

Ref.No.	Part No.	Description				Remark

THERMISTOR

TH601	1-800-944-00	THERMISTOR TH-4700
TH651	1-800-944-00	THERMISTOR TH-4700
THP601 ⚠	1-806-387-11	THERMISTOR (POSITIVE)

****

	*1-611-717-11	N BOARD			
		*******			
	*4-342-117-00	CASE, SHIELD (MAIN), R			
	*4-342-118-00	LID, SHIELD CASE, R			

CAPACITOR

C1	1-123-611-00	ELECT	1MF	20%	50V
C2	1-123-613-00	ELECT	3.3MF	20%	50V
C3	1-102-112-00	CERAMIC	330PF	10%	50V
C4	1-123-821-00	ELECT	47MF	20%	16V

DIODE

D1	8-719-110-32	DIODE PH302B

IC

IC1	8-759-602-54	IC CX20106A

RESISTOR

R1	1-247-799-00	CARBON	47	5%	1/6W
R2	1-247-775-00	CARBON	4.7	5%	1/6W
R3	1-214-784-00	METAL	200K	1%	1/4W
R4	1-249-433-11	CARBON	22K	5%	1/6W

****

	*A-1296-108-A	A BOARD, SUB, COMPLETE
		**********
	*4-368-692-03	CASE (MAIN), SHIELD
	*4-368-693-02	CASE (UPPER LID), SHIELD
	*4-368-694-02	CASE (BOTTOM LID), SHIELD

CONNECTOR

A1	*1-564-880-31	PLUG, CONNECTOR 3P
A2	*1-560-126-00	PLUG, CONNECTOR (2.5MM) 6P
A3	*1-564-889-11	PLUG, CONNECTOR 12P

CAPACITOR

C102	1-110-175-81	MYLAR	0.1MF	10%	100V
C104	1-123-356-00	ELECT	10MF	20%	16V
C105	1-123-356-00	ELECT	10MF	20%	16V
C106	1-123-323-00	ELECT	470MF	20%	16V
C107	1-123-330-00	ELECT	22MF	20%	16V
C108	1-136-163-00	FILM	0.068MF	5%	50V
C109	1-136-163-00	FILM	0.068MF	5%	50V
C110	1-102-963-00	CERAMIC	33PF	5%	50V
C111	1-123-318-00	ELECT	33MF	20%	16V

The components identified by shading and mark ⚠ are critical for safety. Replace only with part number specified.

A

Ref.No.	Part No.	Description			Remark
C112	1-102-530-00	CERAMIC	120PF	5%	50V
C113	1-102-530-00	CERAMIC	120PF	5%	50V
C114	1-102-851-00	CERAMIC	15PF	5%	50V
C115	1-102-518-00	CERAMIC	33PF	5%	50V
C116	1-102-125-00	CERAMIC	0.0047MF	10%	50V
C117	1-102-125-00	CERAMIC	0.0047MF	10%	50V
C118	1-102-125-00	CERAMIC	0.0047MF	10%	50V
C119	1-108-603-00	MYLAR	0.1MF	5%	50V
C120	1-102-125-00	CERAMIC	0.0047MF	10%	50V
C122	1-123-330-00	ELECT	22MF	20%	16V
C123	1-102-108-00	CERAMIC	150PF	10%	50V
C124	1-104-069-00	POLYSTYRENE	470PF	5%	50V
C126	1-123-318-00	ELECT	33MF	20%	16V
C127	1-102-125-00	CERAMIC	0.0047MF	10%	50V
C128	1-101-004-00	CERAMIC	0.01MF		50V
C129	1-101-004-00	CERAMIC	0.01MF		50V
C130	1-102-125-00	CERAMIC	0.0047MF	10%	50V
C131	1-123-381-00	ELECT	2.2MF	20%	50V
C132	1-102-125-00	CERAMIC	0.0047MF	10%	50V
C133	1-102-125-00	CERAMIC	0.0047MF	10%	50V
C134	1-102-125-00	CERAMIC	0.0047MF	10%	50V
C135	1-102-525-00	CERAMIC	68PF	5%	50V
C136	1-102-525-00	CERAMIC	68PF	5%	50V
C137	1-102-125-00	CERAMIC	0.0047MF	10%	50V
C138	1-123-380-00	ELECT	1MF	20%	50V
C139	1-102-125-00	CERAMIC	0.0047MF	10%	50V
C140	1-102-125-00	CERAMIC	0.0047MF	10%	50V
C141	1-123-318-00	ELECT	33MF	20%	16V
C142	1-102-525-00	CERAMIC	68PF	5%	50V
C143	1-101-004-00	CERAMIC	0.01MF		50V
C144	1-123-286-00	ELECT	0.33MF	20%	50V
C145	1-102-961-00	CERAMIC	27PF	5%	50V
C146	1-123-380-00	ELECT	1MF	20%	50V
C147	1-130-072-00	FILM	0.022MF	2%	100V
C148	1-110-186-81	MYLAR	0.0047MF	10%	400V
C149	1-102-529-00	CERAMIC	100PF	5%	50V
C150	1-102-852-00	CERAMIC	47PF	5%	50V
C151	1-101-004-00	CERAMIC	0.01MF		50V
C152	1-101-004-00	CERAMIC	0.01MF		50V
C153	1-123-356-00	ELECT	10MF	20%	16V
C154	1-101-004-00	CERAMIC	0.01MF		50V
C155	1-123-332-00	ELECT	47MF	20%	16V
C156	1-123-306-00	ELECT	47MF	20%	10V
C157	1-123-306-00	ELECT	47MF	20%	10V
C158	1-123-379-00	ELECT	0.47MF	20%	50V
C159	1-102-816-00	CERAMIC	120PF	5%	50V
C160	1-102-125-00	CERAMIC	0.0047MF	10%	50V
C164	1-108-620-91	MYLAR	0.0033MF	10%	100V
C165	1-108-620-91	MYLAR	0.0033MF	10%	100V
C167	1-108-620-91	MYLAR	0.0033MF	10%	100V
C168	1-108-620-91	MYLAR	0.0033MF	10%	100V
C169	1-123-356-00	ELECT	10MF	20%	16V
C170	1-123-356-00	ELECT	10MF	20%	16V
C171	1-123-318-00	ELECT	33MF	20%	16V
C172	1-123-379-00	ELECT	0.47MF	20%	50V
C173	1-123-379-00	ELECT	0.47MF	20%	50V
C174	1-110-190-81	MYLAR	0.01MF	10%	400V
C175	1-110-190-81	MYLAR	0.01MF	10%	400V
C176	1-123-380-00	ELECT	1MF	20%	50V
C177	1-123-380-00	ELECT	1MF	20%	50V
C179	1-123-369-00	ELECT	4.7MF	20%	25V
C180	1-108-620-91	MYLAR	0.0033MF	10%	100V
C181	1-123-318-00	ELECT	33MF	20%	16V
C182	1-123-307-00	ELECT	100MF	20%	10V
C183	1-101-361-00	CERAMIC	150PF	5%	50V
C184	1-102-973-00	CERAMIC	100PF	5%	50V
C186	1-102-121-00	CERAMIC	0.0022MF	10%	50V
C188	1-102-125-00	CERAMIC	0.0047MF	10%	50V
C189	1-101-006-00	CERAMIC	0.047MF		50V

DISCRIMINATOR

CD151	1-404-501-00	DISCRIMINATOR, CERAMIC

FILTER

CF101	1-527-840-00	FILTER, CERAMIC
CF102	1-404-134-00	TRAP, CERAMIC (5.5MHZ)
CF151	1-527-839-00	FILTER, CERAMIC
SWF101	1-404-438-00	FILTER, SAW

DIODE

D101	8-719-911-19	DIODE 1SS119
D102	8-719-911-19	DIODE 1SS119.
D103	8-719-102-71	DIODE RD5.6E-N2
D104	8-719-911-19	DIODE 1SS119
D105	8-719-911-19	DIODE 1SS119
D151	8-719-911-19	DIODE 1SS119
D152	8-719-911-19	DIODE 1SS119
D153	8-719-911-19	DIODE 1SS119
D154	8-719-911-19	DIODE 1SS119
D170	8-719-911-19	DIODE 1SS119
D171	8-719-911-19	DIODE 1SS119

IC

IC101	8-759-909-08	IC TDA3541
IC102	8-759-909-54	IC TDA2546A
IC103	8-759-602-16	IC M54572L
IC151	8-759-007-54	IC TDA4940
IC152	8-759-007-55	IC TDA4944

COIL

L101	1-404-476-00	COIL, IF
L102	1-404-476-00	COIL, IF
L103	1-408-399-00	MICRO INDUCTOR 1.5UH
L104	1-408-406-00	MICRO INDUCTOR 5.6UH
L105	1-404-477-00	COIL, IF

A

Ref.No.	Part No.	Description	Remark
L106	1-404-493-00	COIL	
L107	1-404-493-00	COIL	
L109	1-408-409-00	MICRO INDUCTOR 10UH	
L110	1-408-406-00	MICRO INDUCTOR 5.6UH	
L111	1-404-493-00	COIL	
L113	1-408-226-00	MICRO INDUCTOR 82UH	
L114	1-407-489-00	MICRO INDUCTOR 560UH	
L116	1-408-406-00	MICRO INDUCTOR 5.6UH	
L117	1-408-428-00	MICRO INDUCTOR 390UH	
L170	1-408-247-00	MICRO INDUCTOR 33MMH	
L171	1-408-408-00	MICRO INDUCTOR 8.2UH	
		TRANSISTOR	
Q101	8-729-178-54	TRANSISTOR 2SC2785	
Q102	8-729-105-47	TRANSISTOR 2SC2026-L	
Q103	8-729-117-54	TRANSISTOR 2SA1175	
Q104	8-729-900-36	TRANSISTOR DTC124ES	
Q105	8-729-117-54	TRANSISTOR 2SA1175	
Q151	8-729-178-54	TRANSISTOR 2SC2785	
Q152	8-729-178-54	TRANSISTOR 2SC2785	
Q153	8-729-178-54	TRANSISTOR 2SC2785	
Q154	8-729-900-89	TRANSISTOR DTC144ES	
Q155	8-729-178-54	TRANSISTOR 2SC2785	
Q156	8-729-178-54	TRANSISTOR 2SC2785	
Q157	8-729-900-89	TRANSISTOR DTC144ES	
Q158	8-729-900-89	TRANSISTOR DTC144ES	
Q172	8-729-117-54	TRANSISTOR 2SA1175	
Q173	8-729-178-54	TRANSISTOR 2SC2785	
Q174	8-729-178-54	TRANSISTOR 2SC2785	
Q175	8-729-178-54	TRANSISTOR 2SC2785	
		RESISTOR	
R101	1-215-738-91	METAL 1K 5% 1/6W	
R102	1-215-738-91	METAL 1K 5% 1/6W	
R105	1-215-760-91	METAL 8.2K 5% 1/6W	
R106	1-215-750-91	METAL 3.3K 5% 1/6W	
R107	1-215-750-91	METAL 3.3K 5% 1/6W	
R108	1-215-798-91	METAL 330K 5% 1/6W	
R109	1-215-746-91	METAL 2.2K 5% 1/6W	
R110	1-215-746-91	METAL 2.2K 5% 1/6W	
R111	1-215-754-91	METAL 4.7K 5% 1/6W	
R112	1-215-734-91	METAL 680 5% 1/6W	
R113	1-215-752-91	METAL 3.9K 5% 1/6W	
R114	1-215-722-91	METAL 220 5% 1/6W	
R115	1-215-750-91	METAL 3.3K 5% 1/6W	
R116	1-215-730-91	METAL 470 5% 1/6W	
R117	1-215-710-91	METAL 68 5% 1/6W	
R118	1-215-724-91	METAL 270 5% 1/6W	
R119	1-215-730-91	METAL 470 5% 1/6W	
R120	1-215-778-91	METAL 47K 5% 1/6W	
R122	1-215-762-91	METAL 10K 5% 1/6W	
R125	1-215-736-91	METAL 820 5% 1/6W	
R126	1-215-736-91	METAL 820 5% 1/6W	
R127	1-215-736-91	METAL 820 5% 1/6W	
R129	1-215-810-91	METAL 1M 5% 1/6W	
R131	1-215-778-91	METAL 47K 5% 1/6W	
R132	1-215-762-91	METAL 10K 5% 1/6W	
R134	1-215-782-91	METAL 68K 5% 1/6W	
R135	1-215-776-91	METAL 39K 5% 1/6W	
R136	1-215-770-91	METAL 22K 5% 1/6W	
R137	1-215-770-91	METAL 22K 5% 1/6W	
R140	1-215-738-91	METAL 1K 5% 1/6W	
R141	1-215-766-91	METAL 15K 5% 1/6W	
R142	1-215-786-91	METAL 100K 5% 1/6W	
R143	1-215-786-91	METAL 100K 5% 1/6W	
R144	1-215-752-91	METAL 3.9K 5% 1/6W	
R145	1-215-752-91	METAL 3.9K 5% 1/6W	
R146	1-215-754-91	METAL 4.7K 5% 1/6W	
R151	1-215-736-91	METAL 820 5% 1/6W	
R152	1-215-776-91	METAL 39K 5% 1/6W	
R153	1-215-728-91	METAL 390 5% 1/6W	
R154	1-215-714-91	METAL 100 5% 1/6W	
R155	1-215-770-91	METAL 22K 5% 1/6W	
R156	1-215-784-91	METAL 82K 5% 1/6W	
R157	1-215-754-91	METAL 4.7K 5% 1/6W	
R158	1-215-754-91	METAL 4.7K 5% 1/6W	
R159	1-215-754-91	METAL 4.7K 5% 1/6W	
R160	1-215-754-91	METAL 4.7K 5% 1/6W	
R161	1-215-738-91	METAL 1K 5% 1/6W	
R162	1-215-738-91	METAL 1K 5% 1/6W	
R166	1-215-750-91	METAL 3.3K 5% 1/6W	
R167	1-215-774-91	METAL 33K 5% 1/6W	
R168	1-215-770-91	METAL 22K 5% 1/6W	
R172	1-215-720-91	METAL 180 5% 1/6W	
R173	1-215-778-91	METAL 47K 5% 1/6W	
R174	1-215-796-91	METAL 270K 5% 1/6W	
R175	1-215-772-91	METAL 27K 5% 1/6W	
R176	1-215-738-91	METAL 1K 5% 1/6W	
R177	1-215-762-91	METAL 10K 5% 1/6W	
R178	1-215-762-91	METAL 10K 5% 1/6W	
R179	1-215-762-91	METAL 10K 5% 1/6W	
R180	1-215-738-91	METAL 1K 5% 1/6W	
R181	1-215-740-91	METAL 1.2K 5% 1/6W	
R182	1-215-746-91	METAL 2.2K 5% 1/6W	
R183	1-215-738-91	METAL 1K 5% 1/6W	
R184	1-215-724-91	METAL 270 5% 1/6W	
R185	1-215-726-91	METAL 330 5% 1/6W	
R188	1-215-766-91	METAL 15K 5% 1/6W	
R191	1-215-732-91	METAL 560 5% 1/6W	
R192	1-215-732-91	METAL 560 5% 1/6W	
R193	1-215-714-91	METAL 100 5% 1/6W	
		VARIABLE RESISTOR	
RV101	1-228-727-00	RES, ADJ, CERAMIC CARBON 47K	
RV151	1-228-726-00	RES, ADJ, CERAMIC CARBON 33K	

A C

Ref.No.	Part No.	Description				Remark
		TUNER				
TU101⚠	1-463-577-11	TUNER, ET (BT-883A)				
**********						
	*A-1330-712-A	C BOARD, COMPLETE				
		**********				
⚠	1-526-644-41	SOCKET, CRT				
		CONNECTOR				
C1	*1-508-765-00	3P PLUG (M)				
C2	*1-564-879-31	PLUG, CONNECTOR 2P				
C3	*1-564-880-31	PLUG, CONNECTOR 3P				
C4	*1-564-884-31	PLUG, CONNECTOR 7P				
C5	*1-508-766-00	4P PLUG (M)				
C6	*1-508-784-00	1P PLUG				
		CAPACITOR				
C701	1-102-116-00	CERAMIC	680PF	10%	50V	
C702	1-102-116-00	CERAMIC	680PF	10%	50V	
C703	1-102-116-00	CERAMIC	680PF	10%	50V	
C704	1-102-945-00	CERAMIC	8PF	1PF	50V	
C705	1-102-945-00	CERAMIC	8PF	1PF	50V	
C706	1-102-945-00	CERAMIC	8PF	1PF	50V	
C709	1-123-356-00	ELECT	10MF	20%	16V	
C711	1-102-963-00	CERAMIC	33PF	5%	50V	
C712	1-102-963-00	CERAMIC	33PF	5%	50V	
C713	1-102-963-00	CERAMIC	33PF	5%	50V	
C731	1-123-356-00	ELECT	10MF	20%	16V	
C732	1-101-006-00	CERAMIC	0.047MF		50V	
C733	1-123-356-00	ELECT	10MF	20%	25V	
C735	1-123-356-00	ELECT	10MF	20%	25V	
C737	1-123-254-00	ELECT	10MF		250V	
C741	1-129-714-00	FILM	0.01MF	10%	630V	
C742	1-102-249-00	CERAMIC	680PF	20%	2KV	
C751	1-101-361-00	CERAMIC	150PF	5%	50V	
C752	1-108-617-91	MYLAR	0.0018MF	10%	100V	
C753	1-106-196-00	MYLAR	0.01MF	10%	100V	
C754	1-102-980-00	CERAMIC	270PF	5%	50V	
C757	1-106-220-00	MYLAR	0.1MF	10%	100V	
C759	1-123-356-00	ELECT	10MF	20%	50V	
C760	1-123-382-00	ELECT	33MF	20%	50V	
C761	1-101-006-00	CERAMIC	0.047MF		50V	
C762	1-106-196-00	MYLAR	0.01MF	10%	100V	
		DIODE				
D701	8-719-911-19	DIODE 1SS119				
D702	8-719-911-19	DIODE 1SS119				
D703	8-719-911-19	DIODE 1SS119				
D704	8-719-911-19	DIODE 1SS119				
D705	8-719-911-19	DIODE 1SS119				
D706	8-719-911-19	DIODE 1SS119				
D707	8-719-911-19	DIODE 1SS119				
D708	8-719-911-19	DIODE 1SS119				
D709	8-719-911-19	DIODE 1SS119				
		COIL				
L701	1-408-420-00	MICRO INDUCTOR 82UH				
L751	1-408-413-00	MICRO INDUCTOR 22UH				
		TRANSISTOR				
Q701	8-729-255-12	TRANSISTOR 2SC2551				
Q702	8-729-255-12	TRANSISTOR 2SC2551				
Q703	8-729-255-12	TRANSISTOR 2SC2551				
Q704	8-729-326-11	TRANSISTOR 2SC2611				
	4-303-483-00	HEAD, WASHER, TAPPING SCREW; Q704				
Q705	8-729-326-11	TRANSISTOR 2SC2611				
	4-303-483-00	HEAD, WASHER, TAPPING SCREW; Q705				
Q706	8-729-326-11	TRANSISTOR 2SC2611				
	4-303-483-00	HEAD, WASHER, TAPPING SCREW; Q706				
Q707	8-729-200-17	TRANSISTOR 2SA1091				
Q708	8-729-200-17	TRANSISTOR 2SA1091				
Q709	8-729-200-17	TRANSISTOR 2SA1091				
Q710	8-729-802-47	TRANSISTOR 2SC3504				
Q711	8-729-802-47	TRANSISTOR 2SC3504				
Q712	8-729-802-47	TRANSISTOR 2SC3504				
Q713	8-729-117-54	TRANSISTOR 2SA1175				
Q714	8-729-900-36	TRANSISTOR DTC124ES				
Q715	8-729-178-54	TRANSISTOR 2SC2785				
Q751	8-729-178-54	TRANSISTOR 2SC2785				
Q752	8-729-178-54	TRANSISTOR 2SC2785				
Q753	8-729-103-43	TRANSISTOR 2SB734				
Q754	8-729-177-43	TRANSISTOR 2SD774				
		RESISTOR				
R701	1-216-485-11	METAL OXIDE	5.6K	5%	3W	F
R702	1-216-485-11	METAL OXIDE	5.6K	5%	3W	F
R703	1-216-485-11	METAL OXIDE	5.6K	5%	3W	F
R704	1-247-710-11	CARBON	560	5%	1/4W	F
R705	1-247-710-11	CARBON	560	5%	1/4W	F
R706	1-247-710-11	CARBON	560	5%	1/4W	F
R707	1-249-417-11	CARBON	1K	5%	1/6W	
R708	1-249-417-11	CARBON	1K	5%	1/6W	
R709	1-249-417-11	CARBON	1K	5%	1/6W	
R710	1-214-909-00	METAL	68K	1%	1/2W	
R711	1-214-909-00	METAL	68K	1%	1/2W	
R712	1-214-909-00	METAL	68K	1%	1/2W	
R713	1-249-421-11	CARBON	2.2K	5%	1/6W	
R714	1-249-421-11	CARBON	2.2K	5%	1/6W	
R715	1-249-423-11	CARBON	3.3K	5%	1/6W	
R716	1-249-429-11	CARBON	10K	5%	1/6W	
R717	1-249-429-11	CARBON	10K	5%	1/6W	
R718	1-249-429-11	CARBON	10K	5%	1/6W	
R719	1-249-425-11	CARBON	4.7K	5%	1/6W	

The components identified by shading and mark ⚠ are critical for safety. Replace only with part number specified.

C D1

Ref.No.	Part No.	Description				Remark
R720	1-249-420-11	CARBON	1.8K	5%	1/6W	
R721	1-249-420-11	CARBON	1.8K	5%	1/6W	
R722	1-249-419-11	CARBON	1.5K	5%	1/6W	
R723	1-249-419-11	CARBON	1.5K	5%	1/6W	
R724	1-249-419-11	CARBON	1.5K	5%	1/6W	
R725	1-214-961-00	METAL	750K	1%	1/4W	
R726	1-214-956-00	METAL	470K	1%	1/4W	
R727	1-214-787-00	METAL	270K	1%	1/4W	
R730	1-247-815-00	CARBON	220	5%	1/6W	
R731	1-247-851-00	CARBON	6.8K	5%	1/6W	
R732	1-249-420-11	CARBON	1.8K	5%	1/6W	
R733	1-247-236-00	CARBON	680	5%	1/2W	
R734	1-249-421-11	CARBON	2.2K	5%	1/6W	
R735	1-247-799-00	CARBON	47	5%	1/6W	
R736	1-249-417-11	CARBON	1K	5%	1/6W	
R737	1-215-878-00	METAL OXIDE	33K	5%	1W	F
R738	1-215-878-00	METAL OXIDE	33K	5%	1W	F
R739	1-215-878-00	METAL OXIDE	33K	5%	1W	F
R740	1-249-405-11	CARBON	100	5%	1/6W	F
R741	1-207-458-00	WIREWOUND	0.39	10%	1/2W	
R742	1-202-838-00	SOLID	100K	10%	1/2W	
R743	1-249-429-11	CARBON	10K	5%	1/6W	
R744	1-202-844-00	SOLID	330K	10%	1/2W	
R745	1-202-842-91	SOLID	220K	10%	1/2W	
R746	1-202-821-11	SOLID	1.8K	10%	1/2W	
R747	1-202-821-11	SOLID	1.8K	10%	1/2W	
R748	1-202-821-11	SOLID	1.8K	10%	1/2W	
R751	1-247-833-00	CARBON	1.2K	5%	1/6W	
R752	1-247-849-00	CARBON	5.6K	5%	1/6W	
R753	1-249-414-11	CARBON	560	5%	1/6W	
R754	1-249-434-11	CARBON	27K	5%	1/6W	
R755	1-249-405-11	CARBON	100	5%	1/6W	
R756	1-249-419-11	CARBON	1.5K	5%	1/6W	
R757	1-249-405-11	CARBON	100	5%	1/6W	
R758	1-247-815-00	CARBON	220	5%	1/6W	
R760	1-247-819-00	CARBON	330	5%	1/6W	
R761	1-249-429-11	CARBON	10K	5%	1/6W	
R762	1-247-895-00	CARBON	470K	5%	1/6W	
R763	1-249-429-11	CARBON	10K	5%	1/6W	
R764	1-249-455-11	CARBON	4.7	5%	1/4W	F
R765	1-249-455-11	CARBON	4.7	5%	1/4W	F
R766	1-247-833-00	CARBON	1.2K	5%	1/6W	
R767	1-247-837-00	CARBON	1.8K	5%	1/6W	
R768	1-216-449-11	METAL OXIDE	56	5%	2W	F
R769	1-217-403-00	FUSIBLE	220	5%	1/4W	F

VARIABLE RESISTOR

RV701	1-230-105-00	RES, ADJ, CARBON 3.3K
RV702	1-230-103-00	RES, ADJ, CARBON 2.2K
RV741	1-230-641-11	RES, ADJ, METAL GLAZE 2.2M

SPARK GAP

SG701	1-519-063-XX	DISCHARGING GAP
SG702	1-519-063-XX	DISCHARGING GAP
SG703	1-519-063-XX	DISCHARGING GAP

****

*A-1340-817-A D1 BOARD, COMPLETE
****

CAPACITOR

C1501	1-108-630-91	MYLAR	0.022MF	10%	100V
C1503	1-106-196-00	MYLAR	0.01MF	10%	100V
C1504	1-123-380-00	ELECT	1MF	20%	50V
C1505	1-108-622-91	MYLAR	0.0047MF	10%	100V
C1506	1-123-382-00	ELECT	3.3MF	20%	50V
C1507	1-123-357-00	ELECT	22MF	20%	50V
C1508	1-123-379-00	ELECT	0.47MF	20%	50V
C1509	1-123-360-00	ELECT	100MF	20%	50V
C1510	1-123-381-00	ELECT	2.2MF	20%	50V
C1511	1-123-380-00	ELECT	1MF	20%	50V
C1512	1-106-196-00	MYLAR	0.01MF	10%	100V
C1513	1-123-332-00	ELECT	47MF	20%	16V
C1514	1-123-330-00	ELECT	22MF	20%	16V
C1515	1-123-330-00	ELECT	22MF	20%	16V
C1516	1-123-360-00	ELECT	100MF	20%	50V
C1517	1-123-382-00	ELECT	3.3MF	20%	50V
C1518	1-106-192-00	MYLAR	0.0068MF	10%	100V
C1519	1-106-208-00	MYLAR	0.033MF	10%	100V
C1520	1-123-333-00	ELECT	100MF	20%	16V
C1521	1-108-637-00	MYLAR	0.082MF	10%	100V
C1522	1-108-630-91	MYLAR	0.022MF	10%	100V
C1523	1-123-356-00	ELECT	10MF	20%	16V
C1524	1-108-622-91	MYLAR	0.0047MF	10%	100V
C1525	1-129-701-00	FILM	0.01MF	5%	100V
C1526	1-102-125-00	CERAMIC	0.0047MF	10%	50V
C1527	1-136-165-00	FILM	0.1MF	5%	50V

CONNECTOR

CNJ1	*1-562-370-21	CONNECTOR, BOARD TO BOARD 18P

DIODE

D1501	8-719-911-19	DIODE 1SS119
D1502	8-719-911-19	DIODE 1SS119

IC

IC1501	8-759-905-39	IC TDA1082

COIL

L1501	1-408-245-00	MICRO INDUCTOR 22MMH
L1502	1-407-509-00	MICRO INDUCTOR 27MMH
L1503	1-408-242-00	MICRO INDUCTOR 10MMH
L1504	1-408-247-00	MICRO INDUCTOR 33MMH

Ref.No.	Part No.	Description				Remark
		TRANSISTOR				
Q1501	8-729-178-54	TRANSISTOR 2SC2785				
Q1502	8-729-178-54	TRANSISTOR 2SC2785				
Q1503	8-729-374-02	TRANSISTOR 2SB740				
Q1504	8-729-195-82	TRANSISTOR 2SC2958				
		RESISTOR				
R1501	1-247-805-00	CARBON	82	5%	1/6W	
R1502	1-247-145-00	CARBON	3.9K	5%	1/4W	
R1503	1-249-415-11	CARBON	680	5%	1/6W	
R1504	1-249-432-11	CARBON	18K	5%	1/6W	
R1505	1-249-423-11	CARBON	3.3K	5%	1/6W	
R1506	1-249-432-11	CARBON	18K	5%	1/6W	
R1508	1-249-432-11	CARBON	18K	5%	1/6W	
R1509	1-247-702-11	CARBON	150	5%	1/4W	
R1510	1-249-417-11	CARBON	1K	5%	1/6W	
R1511	1-246-533-00	CARBON	330K	5%	1/4W	
R1512	1-247-891-00	CARBON	330K	5%	1/6W	
R1513	1-247-829-00	CARBON	820	5%	1/6W	
R1514	1-247-815-00	CARBON	220	5%	1/6W	
R1515	1-246-535-00	CARBON	390K	5%	1/4W	
R1516	1-249-429-11	CARBON	10K	5%	1/6W	
R1517	1-247-721-11	CARBON	4.7K	5%	1/4W	
R1518	1-249-465-11	CARBON	47K	5%	1/4W	
R1519	1-249-419-11	CARBON	1.5K	5%	1/6W	
R1520	1-249-421-11	CARBON	2.2K	5%	1/6W	
R1521	1-249-435-11	CARBON	33K	5%	1/6W	
R1522	1-249-435-11	CARBON	33K	5%	1/6W	
R1523	1-247-853-00	CARBON	8.2K	5%	1/6W	
R1524	1-247-811-00	CARBON	150	5%	1/6W	
R1525	1-249-429-11	CARBON	10K	5%	1/6W	
R1526	1-247-725-11	CARBON	10K	5%	1/4W	
R1527	1-247-787-00	CARBON	15	5%	1/6W	
R1528	1-249-414-11	CARBON	560	5%	1/6W	
R1529	1-249-434-11	CARBON	27K	5%	1/6W	
R1530	1-216-451-11	METAL OXIDE	120	5%	2W	F
R1531	1-215-865-11	METAL OXIDE	220	5%	1W	F
R1532	1-247-809-00	CARBON	120	5%	1/6W	
R1533	1-247-242-00	CARBON	1.2K	5%	1/2W	
R1534	1-247-803-00	CARBON	68	5%	1/6W	
R1535	1-216-423-11	METAL OXIDE	27	5%	1W	F
R1536	1-247-869-00	CARBON	39K	5%	1/6W	
		VARIABLE RESISTOR				
RV1501	1-230-625-11	RES, ADJ, CARBON 330				
RV1502	1-230-634-51	RES, ADJ, CARBON 100K				
RV1503	1-230-634-51	RES, ADJ, CARBON 100K				
RV1504	1-226-771-00	RES, ADJ, METAL GLAZE 1K				
RV1505	1-230-628-11	RES, ADJ, CARBON 2.2K				
RV1506	1-230-634-51	RES, ADJ, CARBON 100K				
RV1507	1-230-630-11	RES, ADJ, CARBON 10K				
RV1508	1-230-627-11	RES, ADJ, CARBON 1K				
RV1509	1-230-271-00	RES, ADJ, CARBON 4.7K				
RV1510	1-230-630-11	RES, ADJ, CARBON 10K				
RV1511	1-230-625-11	RES, ADJ, CARBON 330				
		THERMISTOR				
TH1501	1-806-110-00	THERMISTOR				
TH1502	1-800-625-00	THERMISTOR				

****

	*A-1345-618-A	D BOARD, SUB, COMPLETE **********			
	4-303-483-00	HEAD, WASHER, TAPPING SCREW			
		CAPACITOR			
C001	1-123-307-00	ELECT	100MF	20%	10V
C002	1-123-381-00	ELECT	2.2MF	20%	50V
C003	1-102-973-00	CERAMIC	100PF	5%	50V
C004	1-108-603-00	MYLAR	0.1MF	5%	50V
C005	1-123-356-00	ELECT	10MF	20%	50V
C006	1-102-959-00	CERAMIC	22PF	5%	50V
C007	1-102-963-00	CERAMIC	33PF	5%	50V
C008	1-123-356-00	ELECT	10MF	20%	50V
C009	1-102-114-00	CERAMIC	470PF	10%	50V
C010	1-123-369-00	ELECT	4.7MF	20%	25V
C011	1-124-253-00	ELECT	0.47MF	20%	50V
C012	1-101-004-00	CERAMIC	0.01MF		50V
C015	1-123-381-00	ELECT	2.2MF	20%	50V
C016	1-101-810-00	CERAMIC	100PF	5%	500V
C017	1-123-306-00	ELECT	47MF	20%	10V
C017A	1-123-307-00	ELECT	100MF	20%	10V
C018	1-106-220-00	MYLAR	0.1MF	10%	100V
C019	1-123-306-00	ELECT	47MF	20%	10V
C020	1-102-112-00	CERAMIC	330PF	10%	50V
C022	1-161-377-00	CERAMIC	0.0047MF	20%	50V
C026	1-102-074-00	CERAMIC	0.001MF	10%	50V
C027	1-123-307-00	ELECT	100MF	20%	10V
C201	1-102-114-00	CERAMIC	470PF	10%	50V
C202	1-102-074-00	CERAMIC	0.001MF	10%	50V
C203	1-123-380-00	ELECT	1MF	20%	50V
C204	1-102-114-00	CERAMIC	470PF	10%	50V
C205	1-123-356-00	ELECT	10MF	20%	16V
C206	1-102-074-00	CERAMIC	0.001MF	10%	50V
C207	1-123-380-00	ELECT	1MF	20%	50V
C208	1-123-332-00	ELECT	47MF	20%	16V
C209	1-106-212-00	MYLAR	0.047MF	10%	100V
C210	1-108-614-91	MYLAR	0.001MF	10%	100V
C211	1-123-380-00	ELECT	1MF	20%	50V
C212	1-123-369-00	ELECT	4.7MF	20%	50V
C213	1-123-356-00	ELECT	10MF	20%	16V
C214	1-123-356-00	ELECT	10MF	20%	16V
C215	1-123-356-00	ELECT	10MF	20%	16V
C216	1-123-356-00	ELECT	10MF	20%	16V
C217	1-102-074-00	CERAMIC	0.001MF	10%	50V

D

Ref.No.	Part No.	Description			Remark
C218	1-106-208-00	MYLAR	0.033MF	10%	100V
C219	1-123-356-00	ELECT	10MF	20%	16V
C220	1-106-212-00	MYLAR	0.047MF	10%	100V
C221	1-108-614-91	MYLAR	0.001MF	10%	100V
C222	1-123-322-00	ELECT	330MF	20%	16V
C223	1-123-380-00	ELECT	1MF	20%	50V
C224	1-123-380-00	ELECT	1MF	20%	50V
C225	1-123-322-00	ELECT	330MF	20%	16V
C226	1-123-330-00	ELECT	22MF	20%	16V
C227	1-123-330-00	ELECT	22MF	20%	16V
C228	1-102-945-00	CERAMIC	8PF	1PF	50V
C229	1-102-108-00	CERAMIC	150PF	10%	50V
C230	1-106-208-00	MYLAR	0.033MF	10%	100V
C231	1-123-333-00	ELECT	100MF	20%	16V
C232	1-123-330-00	ELECT	22MF	20%	16V
C233	1-102-114-00	CERAMIC	470PF	10%	50V
C234	1-123-379-00	ELECT	0.47MF	20%	50V
C235	1-123-330-00	ELECT	22MF	20%	16V
C236	1-102-114-00	CERAMIC	470PF	10%	50V
C237	1-123-379-00	ELECT	0.47MF	20%	50V
C238	1-108-603-00	MYLAR	0.1MF	5%	50V
C239	1-108-603-00	MYLAR	0.1MF	5%	50V
C240	1-108-603-00	MYLAR	0.1MF	5%	50V
C241	1-124-472-11	ELECT	470MF	20%	10V
C243	1-123-332-00	ELECT	47MF	20%	16V
C244	1-102-114-00	CERAMIC	470PF	10%	50V
C245	1-102-114-00	CERAMIC	470PF	10%	50V
C272	1-108-603-00	MYLAR	0.1MF	5%	50V
C273	1-123-359-00	ELECT	47MF	20%	50V
C274	1-123-364-00	ELECT	1000MF	20%	50V
C276	1-123-359-00	ELECT	47MF	20%	50V
C277	1-108-603-00	MYLAR	0.1MF	5%	50V
C278	1-123-349-00	ELECT	1000MF	20%	35V
C279	1-123-343-00	ELECT	33MF	20%	25V
C280	1-123-349-00	ELECT	1000MF	20%	35V
C281	1-123-360-00	ELECT	100MF	20%	50V
C282	1-101-005-00	CERAMIC	0.022MF		50V
C283	1-101-005-00	CERAMIC	0.022MF		50V
C284	1-102-106-00	CERAMIC	100PF	10%	50V
C285	1-102-106-00	CERAMIC	100PF	10%	50V
C288	1-108-630-91	MYLAR	0.022MF	10%	100V
C289	1-108-630-91	MYLAR	0.022MF	10%	100V
C290	1-123-343-00	ELECT	33MF	20%	25V
C291	1-123-343-00	ELECT	33MF	20%	25V
C301	1-102-944-00	CERAMIC	7PF	1PF	50V
C302	1-102-944-00	CERAMIC	7PF	1PF	50V
C303	1-102-951-00	CERAMIC	15PF	5%	50V
C304	1-102-816-00	CERAMIC	120PF	5%	50V
C308	1-123-356-00	ELECT	10MF	20%	16V
C309	1-123-380-00	ELECT	1MF	20%	50V
C311	1-123-323-00	ELECT	470MF	20%	16V
C312	1-123-279-00	ELECT	2.2MF	20%	50V
C313	1-123-356-00	ELECT	10MF	20%	25V
C314	1-123-381-00	ELECT	2.2MF	20%	50V
C315	1-123-381-00	ELECT	2.2MF	20%	50V
C316	1-108-622-91	MYLAR	0.0047MF	10%	100V
C317	1-108-630-91	MYLAR	0.022MF	10%	100V
C318	1-131-345-00	TANTALUM	0.47MF	10%	35V
C319	1-123-356-00	ELECT	10MF	20%	16V
C320	1-123-586-00	ELECT	0.1MF	20%	50V
C321	1-131-345-00	TANTALUM	0.47MF	10%	35V
C322	1-131-345-00	TANTALUM	0.47MF	10%	35V
C323	1-102-110-00	CERAMIC	220PF	10%	50V
C324	1-102-110-00	CERAMIC	220PF	10%	50V
C325	1-136-173-00	FILM	0.47MF	5%	50V
C326	1-136-173-00	FILM	0.47MF	5%	50V
C327	1-121-705-00	ELECT	2.2MF	30%	25V
C328	1-102-973-00	CERAMIC	100PF	5%	50V
C329	1-101-004-00	CERAMIC	0.01MF		50V
C331	1-161-330-00	CERAMIC	0.01MF	30%	25V
C332	1-101-880-00	CERAMIC	47PF	5%	50V
C333	1-123-356-00	ELECT	10MF	20%	16V
C334	1-123-356-00	ELECT	10MF	20%	16V
C336	1-102-858-00	CERAMIC	10PF	0.5PF	50V
C337	1-102-888-00	CERAMIC	150PF	5%	50V
C338	1-102-884-00	CERAMIC	33PF	5%	50V
C339	1-102-959-00	CERAMIC	22PF	5%	50V
C340	1-102-945-00	CERAMIC	8PF	1PF	50V
C341	1-102-947-00	CERAMIC	10PF	5%	50V
C342	1-102-676-00	CERAMIC	68PF	5%	50V
C343	1-102-973-00	CERAMIC	100PF	5%	50V
C344	1-123-379-00	ELECT	0.47MF	20%	50V
C346	1-123-333-00	ELECT	100MF	20%	16V
C347	1-108-622-91	MYLAR	0.0047MF	10%	100V
C348	1-123-379-00	ELECT	0.47MF	20%	50V
C350	1-123-318-00	ELECT	33MF	20%	16V
C501	1-108-630-91	MYLAR	0.022MF	10%	100V
C502	1-136-171-00	FILM	0.33MF	5%	50V
C503	1-136-171-00	FILM	0.33MF	5%	50V
C504	1-102-108-00	CERAMIC	150PF	10%	50V
C505	1-123-380-00	ELECT	1MF	20%	50V
C506	1-123-330-00	ELECT	22MF	20%	16V
C507	1-106-224-00	MYLAR	0.15MF	10%	100V
C508	1-123-356-00	ELECT	10MF	20%	16V
C509	1-123-369-00	ELECT	4.7MF	20%	25V
C510	1-123-323-00	ELECT	470MF	20%	16V
C511	1-123-379-00	ELECT	0.47MF	20%	50V
C512	1-106-220-00	MYLAR	0.1MF	10%	100V
C513	1-130-023-00	FILM	0.0027MF	5%	50V
C514	1-123-332-00	ELECT	47MF	20%	16V
C515	1-106-220-00	MYLAR	0.1MF	10%	100V
C516	1-123-357-00	ELECT	22MF	20%	50V
C517	1-102-030-00	CERAMIC	330PF	10%	500V
C518	1-129-743-00	FILM	0.022MF	10%	400V
C519	1-123-931-00	ELECT	3.3MF	20%	160V
C520	1-106-182-00	MYLAR	0.0027MF	10%	100V

D

Ref.No.	Part No.	Description			Remark
C521	1-102-157-00	CERAMIC	560PF	10%	500V
C522	1-123-318-00	ELECT	33MF	20%	16V
C523	1-108-431-00	MYLAR	0.068MF	10%	200V
C524	1-123-162-00	ELECT	1MF	20%	50V
C525	1-123-362-00	ELECT	330MF	20%	50V
C527	1-123-360-00	ELECT	100MF	20%	50V
C528	1-123-321-00	ELECT	220MF	20%	16V
C529	1-123-333-00	ELECT	100MF	20%	16V
C530	1-106-359-00	MYLAR	0.0047MF	10%	200V
C531	1-123-356-00	ELECT	10MF	20%	50V
C532	1-106-190-00	MYLAR	0.0056MF	10%	100V
C540	1-108-614-91	MYLAR	0.001MF	10%	100V
C543	1-123-360-00	ELECT	100MF	20%	50V
C545	1-123-379-00	ELECT	0.47MF	20%	50V
C546	1-123-380-00	ELECT	1MF	20%	50V
C551	1-123-322-00	ELECT	330MF	20%	16V
C552	1-123-333-00	ELECT	100MF	20%	16V
C553	1-123-333-00	ELECT	100MF	20%	16V
C801	1-123-093-00	ELECT	22MF	20%	160V
C802	1-102-157-00	CERAMIC	560PF	10%	500V
C803 ⚠	1-102-327-11	CERAMIC	330PF	15%	1.5KV
C804 ⚠	1-161-754-11	CERAMIC	0.001MF	10%	3KV
C805	1-108-423-00	MYLAR	0.015MF	10%	200V
C806	1-129-721-00	FILM	0.039MF	10%	630V
C807	1-136-117-00	FILM	2MF	5%	200V
C808	1-136-053-00	FILM	1.2MF	5%	200V
C809	1-108-845-00	MYLAR	0.047MF	10%	50V
C810	1-106-196-00	MYLAR	0.01MF	10%	100V
C811	1-106-212-00	MYLAR	0.047MF	10%	100V
C812	1-102-223-00	CERAMIC	0.0047MF	10%	2KV
C813	1-106-210-00	MYLAR	0.039MF	10%	100V
C814	1-123-949-00	ELECT	33MF	20%	250V
C815	1-123-362-00	ELECT	330MF	20%	50V
C816	1-102-030-00	CERAMIC	330PF	10%	500V
C818	1-130-894-00	FILM	0.022MF	3%	1.2KV
C819	1-129-711-51	FILM	0.0056MF	10%	630V
C821	1-102-038-00	CERAMIC	0.001MF		500V
C822	1-102-038-00	CERAMIC	0.001MF		500V
C824	1-108-630-91	MYLAR	0.022MF	10%	100V
C825	1-136-184-00	MYLAR	0.68MF	10%	250V
C828	1-102-114-00	CERAMIC	470PF	10%	50V
C830	1-123-380-00	ELECT	1MF	20%	50V

FILTER

CF001	1-527-790-00	OSCILLATOR, CERAMIC

CONNECTOR

CN201	1-561-534-00	SOCKET, PIN 21P
CN202	1-536-813-21	TERMINAL BOARD, INPUT/OUTPUT
CN251	1-536-813-21	TERMINAL BOARD, INPUT/OUTPUT
CN252	1-536-813-21	TERMINAL BOARD, INPUT/OUTPUT
D1	*1-560-288-00	PLUG, CONNECTOR (2.5MM PITCH)
D3	*1-564-880-31	PLUG, CONNECTOR 3P
D4	*1-564-885-11	PLUG, CONNECTOR 8P
D5	*1-508-765-00	3P PLUG (M)
D6	*1-560-123-00	PLUG, CONNECTOR (2.5MM) 3P
D7	*1-564-883-11	PLUG, CONNECTOR 6P
D8	*1-564-889-11	PLUG, CONNECTOR 12P
D10	*1-508-766-00	4P PLUG (M)
D12	*1-508-786-00	2P PLUG (M)
D14	*1-564-884-31	PLUG, CONNECTOR 7P
D15	*1-560-290-00	PLUG, CONNECTOR (2.5MM PITCH)
D16	*1-560-290-00	PLUG, CONNECTOR (2.5MM PITCH)
D17	*1-560-126-00	PLUG, CONNECTOR (2.5MM PITCH)
D18	*1-560-126-00	PLUG, CONNECTOR (2.5MM) 6P
D19	*1-564-346-00	CONNECTOR, BOARD TO BOARD 18P
D20	*1-564-346-00	CONNECTOR, BOARD TO BOARD 18P
D21	*1-560-123-00	PLUG, CONNECTOR (2.5MM PITCH)
D22	*1-560-127-00	PLUG, CONNECTOR (2.5MM PITCH)
D23	*1-560-126-00	PLUG, CONNECTOR (2.5MM PITCH)
D24	*1-508-784-00	1P PLUG
D27	*1-560-290-00	PLUG, CONNECTOR (2.5MM PITCH)
D28	*1-508-784-00	1P PLUG
D30	*1-564-879-11	PLUG, CONNECTOR 2P
D32	*1-508-784-00	1P PLUG
DY1	*1-508-765-00	3P PLUG (M)
DY2	*1-508-765-00	3P PLUG (M)
DY3	*1-508-766-00	4P PLUG (M)

TRIMMER

CV301	1-141-181-11	CAP, TRIMMER

DIODE

D001	8-719-911-19	DIODE 1SS119
D002	8-719-911-19	DIODE 1SS119
D004	8-719-911-19	DIODE 1SS119
D005	8-759-157-40	IC UPC574J
D006	8-719-100-98	DIODE RD30E-B2
D008	8-719-911-19	DIODE 1SS119
D010	8-719-911-19	DIODE 1SS119
D061	8-719-102-71	DIODE RD5.6E-N2
D062	8-719-911-19	DIODE 1SS119
D201	8-719-911-19	DIODE 1SS119
D205	8-719-100-44	DIODE RD7.5E-B2
D206	8-719-911-19	DIODE 1SS119
D212	8-719-911-19	DIODE 1SS119
D213	8-719-911-19	DIODE 1SS119
D214	8-719-911-19	DIODE 1SS119
D215	8-719-911-19	DIODE 1SS119
D216	8-719-911-19	DIODE 1SS119
D217	8-719-911-19	DIODE 1SS119
D218	8-719-911-19	DIODE 1SS119
D219	8-719-911-19	DIODE 1SS119

The components identified by shading and mark ⚠ are critical for safety. Replace only with part number specified.

D

Ref.No.	Part No.	Description	Remark
D221	8-719-101-76	DIODE RD10E-L2	
D222	8-719-101-76	DIODE RD10E-L2	
D223	8-719-101-76	DIODE RD10E-L2	
D224	8-719-101-76	DIODE RD10E-L2	
D271	8-719-911-55	DIODE U05G	
D303	8-719-911-19	DIODE 1SS119	
D304	8-719-911-19	DIODE 1SS119	
D305	8-719-911-19	DIODE 1SS119	
D306	8-719-911-19	DIODE 1SS119	
D307	8-719-911-19	DIODE 1SS119	
D308	8-719-911-19	DIODE 1SS119	
D309	8-719-911-19	DIODE 1SS119	
D501	8-719-911-19	DIODE 1SS119	
D503	8-719-924-06	DIODE ERC24-06S	
D504	8-719-924-06	DIODE ERC24-06S	
D505	8-719-924-06	DIODE ERC24-06S	
D506	8-719-911-19	DIODE 1SS119	
D507	8-719-924-06	DIODE ERC24-06S	
D551	8-719-911-19	DIODE 1SS119	
D552	8-719-911-19	DIODE 1SS119	
D553	8-719-924-06	DIODE ERC24-06S	
D554	8-719-924-06	DIODE ERC24-06S	
D555	8-719-911-19	DIODE 1SS119	
D801	8-719-900-26	DIODE ERD29-08J	
D802	8-719-300-65	DIODE ES1F	
D803	8-719-924-06	DIODE ERC24-06S	
D804	8-719-924-06	DIODE ERC24-06S	
D805	8-719-931-13	DIODE EQB01-13	
D806	8-719-305-15	DIODE GH3F	
D807	8-719-305-15	DIODE GH3F	
		DELAY LINE	
DL301	1-415-427-11	DELAY LINE, Y	
DL302	1-415-122-31	DELAY LINE, 1H (PAL)	
		IC	
IC001	8-759-603-67	IC CX523-117P	
IC002	8-759-600-92	IC M58657P	
IC201	8-759-914-76	IC CX20199	
IC202	8-752-006-10	IC CX20061	
IC251	8-749-943-62	IC STK-4362	
	*4-368-684-01	SPRING (L); IC251	
IC301	8-759-927-67	IC TDA3562A-N5	
IC551	8-759-915-46	IC TDA2579	
	*4-375-717-01	HEAT SINK, IC; IC551	
		MODULE	
IC302	1-235-534-11	CONTROL MODULE, PICTURE	
		COIL	
L001	1-408-425-00	MICRO INDUCTOR 220UH	
L251	1-459-407-00	COIL, FERRITE CHOKE	
L252	1-459-407-00	COIL, FERRITE CHOKE	
L301	1-404-495-00	COIL	
L302	1-408-412-00	MICRO INDUCTOR 18UH	
L304	1-408-408-00	MICRO INDUCTOR 8.2UH	
L306	1-410-260-11	MICRO INDUCTOR 33UH	
L307	1-410-261-11	MICRO INDUCTOR 5.6UH	
L308	1-408-415-00	MICRO INDUCTOR 33UH	
L310	1-407-705-00	MICRO INDUCTOR 100UH	
L311	1-408-227-00	MICRO INDUCTOR 470UH	
L801	1-407-365-00	COIL, CHOKE	
L802	1-459-585-11	COIL (WITH CORE) (DRUM TYPE)	
L803	1-459-224-00	HLC	
L804	1-421-390-00	COIL, FERRITE (PMC)	
L805	1-408-239-00	MICRO INDUCTOR 4.7MMH	
L806	1-421-329-00	COIL, CHOKE	
L808	1-407-365-00	COIL, CHOKE	
L809	1-437-090-00	HDT	
L810	1-407-365-00	COIL, CHOKE	
L811	1-459-074-00	COIL, DUST CORE 6.8MMH(HCC)	
		TRANSISTOR	
Q001	8-729-117-54	TRANSISTOR 2SA1175	
Q003	8-729-178-54	TRANSISTOR 2SC2785	
Q004	8-729-178-54	TRANSISTOR 2SC2785	
Q006	8-729-178-54	TRANSISTOR 2SC2785	
Q007	8-729-603-50	TRANSISTOR 2SC403SP	
Q008	8-729-178-54	TRANSISTOR 2SC2785	
Q009	8-729-178-54	TRANSISTOR 2SC2785	
Q011	8-729-178-54	TRANSISTOR 2SC2785	
Q201	8-729-178-54	TRANSISTOR 2SC2785	
Q206	8-729-178-54	TRANSISTOR 2SC2785	
Q207	8-729-117-54	TRANSISTOR 2SA1175	
Q208	8-729-117-54	TRANSISTOR 2SA1175	
Q301	8-729-178-54	TRANSISTOR 2SC2785	
Q305	8-729-178-54	TRANSISTOR 2SC2785	
Q309	8-729-178-54	TRANSISTOR 2SC2785	
Q310	8-729-178-54	TRANSISTOR 2SC2785	
Q311	8-729-178-54	TRANSISTOR 2SC2785	
Q312	8-729-178-54	TRANSISTOR 2SC2785	
Q313	8-729-178-54	TRANSISTOR 2SC2785	
Q502	8-729-117-54	TRANSISTOR 2SA1175	
Q504	8-729-117-54	TRANSISTOR 2SA1175	
Q505	8-729-168-82	TRANSISTOR 2SC2688	
Q506	8-729-169-02	TRANSISTOR 2SC2690A	
	*4-342-076-00	HEAT SINK, V.OUT; Q506	
Q507	8-729-122-02	TRANSISTOR 2SA1220A	
Q508	8-729-195-82	TRANSISTOR 2SC2958	
Q510	8-729-178-54	TRANSISTOR 2SC2785	
Q511	8-729-178-54	TRANSISTOR 2SC2785	
Q512	8-729-900-36	TRANSISTOR DTC124ES	
Q514	8-729-178-54	TRANSISTOR 2SC2785	

Ref.No.	Part No.	Description				Remark
Q515	8-729-178-54	TRANSISTOR 2SC2785				
Q551	8-729-177-43	TRANSISTOR 2SD774				
Q552	8-729-374-02	TRANSISTOR 2SB740				
Q802	8-729-300-90	TRANSISTOR 2SD1497-06				
	4-365-216-00	SPACER, MICA; Q802				
	*4-368-683-01	SPRING; Q802				
Q803	8-719-801-06	THYRISTOR S6344G				
	4-365-216-00	SPACER, MICA; Q803				
	*4-368-683-01	SPRING; Q803				
		RESISTOR				
R001	1-249-417-11	CARBON	1K	5%	1/6W	
R002	1-249-417-11	CARBON	1K	5%	1/6W	
R003	1-249-417-11	CARBON	1K	5%	1/6W	
R004	1-247-815-00	CARBON	220	5%	1/6W	
R005	1-247-815-00	CARBON	220	5%	1/6W	
R006	1-247-815-00	CARBON	220	5%	1/6W	
R007	1-247-815-00	CARBON	220	5%	1/6W	
R008	1-247-815-00	CARBON	220	5%	1/6W	
R009	1-247-815-00	CARBON	220	5%	1/6W	
R010	1-247-815-00	CARBON	220	5%	1/6W	
R011	1-247-815-00	CARBON	220	5%	1/6W	
R012	1-247-799-00	CARBON	47	5%	1/6W	
R013	1-247-815-00	CARBON	220	5%	1/6W	
R014	1-249-425-11	CARBON	4.7K	5%	1/6W	
R015	1-249-425-11	CARBON	4.7K	5%	1/6W	
R016	1-247-721-11	CARBON	4.7K	5%	1/4W	
R017	1-247-713-11	CARBON	1K	5%	1/4W	
R018	1-249-417-11	CARBON	1K	5%	1/6W	
R020	1-249-437-11	CARBON	47K	5%	1/6W	
R021	1-247-859-00	CARBON	15K	5%	1/6W	
R022	1-247-859-00	CARBON	15K	5%	1/6W	
R023	1-249-405-11	CARBON	100	5%	1/6W	
R024	1-249-417-11	CARBON	1K	5%	1/6W	
R025	1-249-433-11	CARBON	22K	5%	1/6W	
R026	1-247-859-00	CARBON	15K	5%	1/6W	
R027	1-247-708-11	CARBON	470	5%	1/4W	
R028	1-247-163-00	CARBON	22K	5%	1/4W	
R029	1-249-433-11	CARBON	22K	5%	1/6W	
R030	1-247-163-00	CARBON	22K	5%	1/4W	
R031	1-247-163-00	CARBON	22K	5%	1/4W	
R032	1-249-433-11	CARBON	22K	5%	1/6W	
R033	1-249-433-11	CARBON	22K	5%	1/6W	
R034	1-249-433-11	CARBON	22K	5%	1/6W	
R035	1-249-433-11	CARBON	22K	5%	1/6W	
R037	1-249-417-11	CARBON	1K	5%	1/6W	
R038	1-249-422-11	CARBON	2.7K	5%	1/6W	
R039	1-249-405-11	CARBON	100	5%	1/6W	
R040	1-249-433-11	CARBON	22K	5%	1/6W	
R041	1-249-435-11	CARBON	33K	5%	1/6W	
R042	1-247-823-00	CARBON	470	5%	1/6W	
R043	1-247-823-00	CARBON	470	5%	1/6W	
R044	1-249-417-11	CARBON	1K	5%	1/6W	

Ref.No.	Part No.	Description				Remark
R045	1-247-713-11	CARBON	1K	5%	1/4W	
R046	1-249-425-11	CARBON	4.7K	5%	1/6W	
R047	1-249-405-11	CARBON	100	5%	1/6W	
R048	1-249-441-11	CARBON	100K	5%	1/6W	
R049	1-216-464-11	METAL OXIDE	18K	5%	2W	F
R050	1-217-387-00	FUSIBLE	10	5%	1/4W	F
R052	1-247-713-11	CARBON	1K	5%	1/4W	
R053	1-247-883-00	CARBON	150K	5%	1/6W	
R054	1-247-815-00	CARBON	220	5%	1/6W	
R056	1-247-859-00	CARBON	15K	5%	1/6W	
R057	1-249-429-11	CARBON	10K	5%	1/6W	
R060	1-247-819-00	CARBON	330	5%	1/6W	
R061	1-249-433-11	CARBON	22K	5%	1/6W	
R201	1-247-710-11	CARBON	560	5%	1/4W	
R202	1-247-710-11	CARBON	560	5%	1/4W	
R203	1-247-721-11	CARBON	4.7K	5%	1/4W	
R204	1-247-721-11	CARBON	4.7K	5%	1/4W	
R205	1-247-153-00	CARBON	8.2K	5%	1/4W	
R206	1-247-869-00	CARBON	39K	5%	1/6W	
R207	1-247-719-11	CARBON	3.3K	5%	1/4W	
R208	1-249-423-11	CARBON	3.3K	5%	1/6W	
R209	1-249-429-11	CARBON	10K	5%	1/6W	
R210	1-249-429-11	CARBON	10K	5%	1/6W	
R211	1-247-135-00	CARBON	1.5K	5%	1/4W	
R213	1-247-895-00	CARBON	470K	5%	1/6W	
R214	1-249-419-11	CARBON	1.5K	5%	1/6W	
R216	1-249-429-11	CARBON	10K	5%	1/6W	
R217	1-249-417-11	CARBON	1K	5%	1/6W	
R218	1-247-887-00	CARBON	220K	5%	1/6W	
R219	1-247-887-00	CARBON	220K	5%	1/6W	
R220	1-247-104-00	CARBON	75	5%	1/4W	
R221	1-247-708-11	CARBON	470	5%	1/4W	
R222	1-247-873-00	CARBON	56K	5%	1/6W	
R228	1-247-873-00	CARBON	56K	5%	1/6W	
R229	1-249-422-11	CARBON	2.7K	5%	1/6W	
R230	1-249-417-11	CARBON	1K	5%	1/6W	
R231	1-247-821-00	CARBON	390	5%	1/6W	
R232	1-247-688-11	CARBON	10	5%	1/4W	
R233	1-247-823-00	CARBON	470	5%	1/6W	
R234	1-249-440-11	CARBON	82K	5%	1/6W	
R235	1-247-903-00	CARBON	1M	5%	1/6W	
R236	1-249-429-11	CARBON	10K	5%	1/6W	
R237	1-249-421-11	CARBON	2.2K	5%	1/6W	
R238	1-249-420-11	CARBON	1.8K	5%	1/6W	
R239	1-249-421-11	CARBON	2.2K	5%	1/6W	
R240	1-249-429-11	CARBON	10K	5%	1/6W	
R242	1-249-429-11	CARBON	10K	5%	1/6W	
R243	1-249-432-11	CARBON	18K	5%	1/6W	
R244	1-249-460-11	CARBON	15K	5%	1/4W	
R245	1-249-437-11	CARBON	47K	5%	1/6W	
R247	1-247-137-00	CARBON	1.8K	5%	1/4W	
R248	1-247-713-11	CARBON	1K	5%	1/4W	
R249	1-247-137-00	CARBON	1.8K	5%	1/4W	

D

Ref.No.	Part No.	Description				Remark
R251	1-247-815-00	CARBON	220	5%	1/6W	
R252	1-249-405-11	CARBON	100	5%	1/6W	
R253	1-249-405-11	CARBON	100	5%	1/6W	
R254	1-249-405-11	CARBON	100	5%	1/6W	
R255	1-247-719-11	CARBON	3.3K	5%	1/4W	
R256	1-247-719-11	CARBON	3.3K	5%	1/4W	
R257	1-247-104-00	CARBON	75	5%	1/4W	
R278	1-217-387-00	FUSIBLE	10	5%	1/4W	F
R279	1-217-387-00	FUSIBLE	10	5%	1/4W	F
R280	1-249-441-11	CARBON	100K	5%	1/6W	
R281	1-247-849-00	CARBON	5.6K	5%	1/6W	
R282	1-249-425-11	CARBON	4.7K	5%	1/6W	
R283	1-247-713-11	CARBON	1K	5%	1/4W	
R284	1-247-700-11	CARBON	100	5%	1/4W	F
R285	1-249-425-11	CARBON	4.7K	5%	1/6W	
R286	1-247-849-00	CARBON	5.6K	5%	1/6W	
R287	1-249-441-11	CARBON	100K	5%	1/6W	
R288	1-247-881-00	CARBON	120K	5%	1/6W	
R289	1-249-437-11	CARBON	47K	5%	1/6W	
R297	1-247-823-00	CARBON	470	5%	1/6W	
R298	1-247-823-00	CARBON	470	5%	1/6W	
R301	1-247-135-00	CARBON	1.5K	5%	1/4W	
R302	1-249-419-11	CARBON	1.5K	5%	1/6W	
R303	1-247-816-00	CARBON	240	5%	1/6W	
R304	1-249-429-11	CARBON	10K	5%	1/6W	
R305	1-247-823-00	CARBON	470	5%	1/6W	
R306	1-247-823-00	CARBON	470	5%	1/6W	
R307	1-249-415-11	CARBON	680	5%	1/6W	
R308	1-249-425-11	CARBON	4.7K	5%	1/6W	
R319	1-247-713-11	CARBON	1K	5%	1/4W	
R323	1-249-420-11	CARBON	1.8K	5%	1/6W	
R324	1-249-414-11	CARBON	560	5%	1/6W	
R325	1-247-707-11	CARBON	390	5%	1/4W	
R326	1-249-440-11	CARBON	82K	5%	1/6W	
R332	1-249-414-11	CARBON	560	5%	1/6W	
R333	1-247-849-00	CARBON	5.6K	5%	1/6W	
R334	1-247-151-00	CARBON	6.8K	5%	1/4W	
R335	1-249-437-11	CARBON	47K	5%	1/6W	
R336	1-249-429-11	CARBON	10K	5%	1/6W	
R337	1-249-429-11	CARBON	10K	5%	1/6W	
R338	1-249-417-11	CARBON	1K	5%	1/6W	
R339	1-249-417-11	CARBON	1K	5%	1/6W	
R340	1-247-821-00	CARBON	390	5%	1/6W	
R341	1-247-821-00	CARBON	390	5%	1/6W	
R342	1-247-903-00	CARBON	1M	5%	1/6W	
R343	1-249-441-11	CARBON	100K	5%	1/6W	
R344	1-247-149-00	CARBON	5.6K	5%	1/4W	
R345	1-247-882-00	CARBON	130K	5%	1/6W	
R347	1-249-414-11	CARBON	560	5%	1/6W	
R348	1-249-415-11	CARBON	680	5%	1/6W	
R349	1-247-849-00	CARBON	5.6K	5%	1/6W	
R350	1-247-853-00	CARBON	8.2K	5%	1/6W	
R351	1-249-433-11	CARBON	22K	5%	1/6W	
R352	1-249-420-11	CARBON	1.8K	5%	1/6W	
R353	1-249-423-11	CARBON	3.3K	5%	1/6W	
R354	1-247-883-00	CARBON	150K	5%	1/6W	
R356	1-247-857-00	CARBON	12K	5%	1/6W	
R357	1-247-849-00	CARBON	5.6K	5%	1/6W	
R358	1-249-432-11	CARBON	18K	5%	1/6W	
R359	1-247-859-00	CARBON	15K	5%	1/6W	
R360	1-246-517-00	CARBON	68K	5%	1/4W	
R362	1-247-717-11	CARBON	2.2K	5%	1/4W	
R364	1-249-421-11	CARBON	2.2K	5%	1/6W	
R365	1-247-857-00	CARBON	12K	5%	1/6W	
R366	1-247-717-11	CARBON	2.2K	5%	1/4W	
R367	1-247-815-00	CARBON	220	5%	1/6W	
R368	1-247-815-00	CARBON	220	5%	1/6W	
R369	1-247-815-00	CARBON	220	5%	1/6W	
R370	1-247-708-11	CARBON	470	5%	1/4W	
R371	1-249-405-11	CARBON	100	5%	1/6W	
R373	1-247-713-11	CARBON	1K	5%	1/4W	
R376	1-246-507-00	CARBON	27K	5%	1/4W	
R377	1-246-507-00	CARBON	27K	5%	1/4W	
R378	1-249-432-11	CARBON	18K	5%	1/6W	
R379	1-247-864-00	CARBON	24K	5%	1/6W	
R380	1-249-440-11	CARBON	82K	5%	1/6W	
R381	1-249-417-11	CARBON	1K	5%	1/6W	
R382	1-249-417-11	CARBON	1K	5%	1/6W	
R383	1-249-417-11	CARBON	1K	5%	1/6W	
R385	1-249-422-11	CARBON	2.7K	5%	1/6W	
R386	1-249-422-11	CARBON	2.7K	5%	1/6W	
R387	1-249-422-11	CARBON	2.7K	5%	1/6W	
R504	1-249-422-11	CARBON	2.7K	5%	1/6W	
R505	1-249-423-11	CARBON	3.3K	5%	1/6W	
R506	1-247-833-00	CARBON	1.2K	5%	1/6W	
R507	1-249-417-11	CARBON	1K	5%	1/6W	
R508	1-215-461-00	METAL	47K	1%	1/6W	
R509	1-215-477-00	METAL	220K	1%	1/6W	
R510	1-247-851-00	CARBON	6.8K	5%	1/6W	
R511	1-247-805-00	CARBON	82	5%	1/6W	
R512	1-247-829-00	CARBON	820	5%	1/6W	
R513	1-247-857-00	CARBON	12K	5%	1/6W	
R514	1-249-417-11	CARBON	1K	5%	1/6W	
R515	1-247-700-11	CARBON	100	5%	1/4W	
R516	1-247-717-11	CARBON	2.2K	5%	1/4W	
R517	1-246-511-00	CARBON	39K	5%	1/4W	
R520	1-214-765-00	METAL	33K	1%	1/4W	
R521	1-216-464-11	METAL OXIDE	18K	5%	2W	F
R522	1-247-901-00	CARBON	820K	5%	1/6W	
R523	1-247-033-00	CARBON	100	5%	1/8W	F
R524	1-215-869-11	METAL OXIDE	1K	5%	1W	F
R525	1-246-985-00	CARBON	33	5%	1/8W	F
R526	1-249-421-11	CARBON	2.2K	5%	1/6W	
R527	1-246-982-00	CARBON	10	5%	1/8W	F
R528	1-247-161-00	CARBON	18K	5%	1/4W	

D J1 H1

Ref.No.	Part No.	Description				Remark
R529	1-247-711-11	CARBON	680	5%	1/4W	
R530	1-247-892-00	CARBON	360K	5%	1/6W	
R531	1-247-707-11	CARBON	390	5%	1/4W	
R532	1-247-719-11	CARBON	3.3K	5%	1/4W	
R533	1-247-859-00	CARBON	15K	5%	1/6W	
R534	1-247-787-00	CARBON	15	5%	1/6W	
R535	1-247-783-00	CARBON	10	5%	1/6W	
R536	1-216-354-11	METAL OXIDE	2.7	5%	1W	F
R537	1-249-441-11	CARBON	100K	5%	1/6W	
R538	1-247-753-11	CARBON	1.2K	5%	1/2W	F
R539	1-249-440-11	CARBON	82K	5%	1/6W	
R540	1-246-507-00	CARBON	27K	5%	1/4W	
R541	1-247-823-00	CARBON	470	5%	1/6W	
R542	1-216-435-11	METAL OXIDE	2.7K	5%	1W	F
R543	1-247-903-00	CARBON	1M	5%	1/6W	
R544	1-202-467-92	SOLID	3.3M	10%	1/4W	
R547	1-212-990-00	FUSIBLE	220	5%	1/2W	F
R548	1-216-350-11	METAL OXIDE	1.2	5%	1W	F
R549	1-247-033-00	CARBON	100	5%	1/8W	F
R550	1-246-537-00	CARBON	470K	5%	1/4W	
R551	1-217-383-00	FUSIBLE	4.7	5%	1/4W	F
R552	1-217-383-00	FUSIBLE	4.7	5%	1/4W	F
R553	1-246-979-00	CARBON	1.2	5%	1/8W	F
R554	1-249-425-11	CARBON	4.7K	5%	1/6W	
R555	1-249-421-11	CARBON	2.2K	5%	1/6W	
R556	1-216-350-11	METAL OXIDE	1.2	5%	1W	F
R557	1-247-819-00	CARBON	330	5%	1/6W	
R558	1-247-883-00	CARBON	150K	5%	1/6W	
R559	1-247-719-11	CARBON	3.3K	5%	1/4W	
R560	1-249-421-11	CARBON	2.2K	5%	1/6W	
R571	1-247-895-00	CARBON	470K	5%	1/6W	
R572	1-249-441-11	CARBON	100K	5%	1/6W	
R573	1-247-903-00	CARBON	1M	5%	1/6W	
R574	1-247-903-00	CARBON	1M	5%	1/6W	
R575	1-247-177-00	CARBON	82K	5%	1/4W	
R578	1-247-704-11	CARBON	220	5%	1/4W	
R593	1-249-425-11	CARBON	4.7K	5%	1/6W	
R594	1-249-433-11	CARBON	22K	5%	1/6W	
R595	1-247-859-00	CARBON	15K	5%	1/6W	
R596	1-249-423-11	CARBON	3.3K	5%	1/6W	
R597	1-247-719-11	CARBON	3.3K	5%	1/4W	
R598	1-247-849-00	CARBON	5.6K	5%	1/6W	
R599	1-247-815-00	CARBON	220	5%	1/6W	
R800	1-215-886-11	METAL OXIDE	100	5%	2W	F
R801	1-216-345-11	METAL OXIDE	0.47	5%	1W	F
R802	1-247-137-00	CARBON	1.8K	5%	1/4W	
R803	1-247-803-00	CARBON	68	5%	1/6W	
R804	1-215-871-11	METAL OXIDE	2.2K	5%	1W	F
R805	1-215-866-11	METAL OXIDE	330	5%	1W	F
R806	1-202-838-00	SOLID	100K	10%	1/2W	
R807	1-202-824-00	SOLID	3.3K	10%	1/2W	
R808	1-202-826-00	SOLID	4.7K	10%	1/2W	
R809	1-244-925-00	CARBON	150K	5%	1/2W	
R810	1-246-979-00	CARBON	1.2	5%	1/8W	F
R811	1-249-448-11	CARBON	1.2	5%	1/4W	F
R812	1-247-270-00	CARBON	18K	5%	1/2W	
R813	1-215-883-11	METAL OXIDE	33	5%	2W	F
R814	1-246-537-00	CARBON	470K	5%	1/4W	
R817	1-216-379-11	METAL OXIDE	6.8	5%	2W	F
R820	1-215-884-11	METAL OXIDE	47	5%	2W	F
R821	1-215-870-11	METAL OXIDE	1.5K	5%	1W	F
R825	1-207-678-00	WIREWOUND	10	10%	5W	F
R826	1-207-678-00	WIREWOUND	10	10%	5W	F

VARIABLE RESISTOR

RV301	1-228-720-00	RES, ADJ, CERAMIC CARBON 1K
RV302	1-228-724-00	RES, ADJ, CERAMIC CARBON 10K
RV303	1-228-725-00	RES, ADJ, CERAMIC CARBON 22K
RV501	1-226-776-00	RES, ADJ, METAL GLAZE 220K
RV502	1-226-775-00	RES, ADJ, METAL GLAZE 100K
RV503	1-230-522-11	RES, ADJ, METAL GLAZE 4.7K
RV558	1-228-720-00	RES, ADJ, CERAMIC CARBON 1K

SPARK GAP

SG801	1-519-063-XX	DISCHARGING GAP

TRANSFORMER

T301	1-426-121-00	DAT
T801 ⚠	1-437-090-11	HDT
T802 ⚠	1-439-332-42	TRANSFORMER ASSY, FLYBACK
T803	1-413-059-00	TRANSFORMER, FERRITE (DFT)

THERMISTOR

TH501	1-806-213-00	THERMISTOR

CRYSTAL

X301	1-527-789-00	VINRATOR, CRYSTAL

****

*1-618-883-11 J1 BOARD
****

CONNECTOR

CN901	1-507-657-00	JACK (LARGE TYPE)
J1	*1-564-883-11	PLUG, CONNECTOR 6P

RESISTOR

R901	1-247-708-11	CARBON	470	5%	1/4W	
R902	1-247-708-11	CARBON	470	5%	1/4W	

****

*1-619-358-11 H1 BOARD
****

*1-506-908-11 PLUG, CONNECTOR (2.5MM) 14P

The components identified by shading and mark ⚠ are critical for safety. Replace only with part number specified.

H1 H2

Ref.No.	Part No.	Description				Remark
		CAPACITOR				
C401	1-123-617-00	ELECT	10MF	20%	16V	
C403	1-123-616-00	ELECT	4.7MF	20%	25V	
		DIODE				
D401	8-719-911-19	DIODE 1SS119				
D402	8-719-911-19	DIODE 1SS119				
D403	8-719-911-19	DIODE 1SS119				
D404	8-719-911-19	DIODE 1SS119				
D405	8-719-911-19	DIODE 1SS119				
D406	8-719-911-19	DIODE 1SS119				
D407	8-719-911-19	DIODE 1SS119				
D409	8-719-911-19	DIODE 1SS119				
		CONNECTOR				
H4	*1-564-457-11	PLUG, CONNECTOR (2.5MM) 9P				
H5	*1-564-454-31	PLUG, CONNECTOR (2.5MM) 6P				
H6	*1-564-897-11	PLUG, CONNECTOR 8P				
		RESISTOR				
R401	1-249-425-11	CARBON	4.7K	5%	1/6W	
R402	1-249-425-11	CARBON	4.7K	5%	1/6W	
R405	1-247-849-00	CARBON	5.6K	5%	1/6W	
R406	1-247-849-00	CARBON	5.6K	5%	1/6W	
R418	1-249-421-11	CARBON	2.2K	5%	1/6W	
R419	1-249-420-11	CARBON	1.8K	5%	1/6W	
		VARIABLE RESISTOR				
RV401	1-228-578-00	RES, VAR, CARBON 10K				
RV402	1-228-578-00	RES, VAR, CARBON 10K				
RV403	1-228-578-00	RES, VAR, CARBON 10K				
RV404	1-228-578-00	RES, VAR, CARBON 10K				
		SWITCH				
SW401	1-554-118-00	SWITCH, PUSH (1 KEY)				
SW407	1-553-329-00	SWITCH, PUSH (MONO KEY)				
SW408	1-553-329-00	SWITCH, PUSH (MONO KEY)				
SW411	1-553-329-00	SWITCH, PUSH (MONO KEY)				
SW412	1-553-329-00	SWITCH, PUSH (MONO KEY)				
SW413	1-553-329-00	SWITCH, PUSH (MONO KEY)				
SW414	1-553-329-00	SWITCH, PUSH (MONO KEY)				
SW415	1-553-329-00	SWITCH, PUSH (MONO KEY)				
SW416	1-553-329-00	SWITCH, PUSH (MONO KEY)				
SW417	1-553-329-00	SWITCH, PUSH (MONO KEY)				
SW418	1-553-329-00	SWITCH, PUSH (MONO KEY)				
SW419	1-553-329-00	SWITCH, PUSH (MONO KEY)				

****

*1-619-359-11 H2 BOARD
****

*1-506-908-11 PLUG, CONNECTOR (2.5MM) 14P

Ref.No.	Part No.	Description				Remark
	*4-373-201-01	COVER, LED HOLDER				
	*4-373-202-01	HOLDER, LED				
		DIODE				
LED401	8-719-908-08	DIODE SL-1274				
	*1-526-638-00	SOCKET, IC (9P); LED401				
LED402	8-719-903-11	DIODE GL-9PR24				
LED404	8-719-903-11	DIODE GL-9PR24				
LED405	8-719-903-11	DIODE GL-9PR24				
LED406	8-719-903-11	DIODE GL-9PR24				
		RESISTOR				
R407	1-247-813-00	CARBON	180	5%	1/6W	
R412	1-247-813-00	CARBON	180	5%	1/6W	

****

MISCELLANEOUS
****

⚠	1-451-255-31	DEFLECTION YOKE (SY-164)	
	1-452-032-00	MAGNET, DISK; 10MM ø	
	1-452-094-00	MAGNET, ROTATABLE DISK; 15MM ø	
	1-452-146-21	MAGNET, BMC	
⚠	1-452-391-21	NECK ASSY, CRT (NA305)	
⚠	1-536-817-31	TERMINAL BOARD ASSY, ANTENNA	
⚠	1-551-270-31	CORD, POWER	
L901 ⚠	1-426-278-11	COIL, DEMAGNETIZATION	
RV901 ⚠	1-228-544-11	RESISTOR ASSY, HIGH-VOLTAGE	
RV902 ⚠	1-237-280-11	RESISTOR ASSY, HIGH-VOLTAGE	
S901 ⚠	1-554-762-41	SWITCH, PUSH (AC POWER)(1 KEY)	
SP901	1-503-642-11	SPEAKER	
SP902	1-503-642-11	SPEAKER	
V901 ⚠	8-736-653-05	CRT (A64JKJ60X)	

****

ACCESSORIES AND PACKING MATERIALS
****

Part No.	Description	Remark
A-1470-758-A	COMMANDER ASSY (RM-635)	
*4-381-540-01	INDIVIDUAL CARTON	
*4-381-541-01	CUSHION, FRONT	
*4-381-544-01	CUSHION (LOWER)	
*4-381-545-01	CUSHION (ASSY) (UPPER)	
4-337-844-00	BAG, PROTECTION	
4-482-288-91	MANUAL, INSTRUCTION	

The components identified by shading and mark ⚠ are critical for safety. Replace only with part number specified.

HARDWARE NOMENCLATURE

Screw:

– P 3 x 10

- L: *Length in mm*
- D: *Diameter in mm*
- *Type of head*
- *Indicated slotted-head only. Unless otherwise indicated, it means cross-recessed head (Phillips type).*

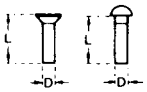

Nut, Washer, Retaining ring:

N 3

- *Diameter of usable screw or shaft*
- *Reference designation*

Reference Designation	Shape	Description	Remarks
		SCREWS	
P		pan-head screw	binding-head (B) screw for replacement
PWH		pan-head screw with washer face	binding-head (B) screw and flat washer for replacement
PS PSP		pan-head screw with spring washer	binding-head (B) screw and spring washer for replacement
PSW PSPW		pan-head screw with spring and flat washers	binding-head (B) screw and spring and flat washers for replacement
R		round-head screw	binding-head (B) screw for replacement
K		flat-countersunk-head screw	
RK		oval-countersunk-head screw	
B		binding-head screw	
T		truss-head screw	binding-head (B) screw for replacement
F		flat-fillister-head screw	
RF		fillister-head screw	
BV		brazier-head screw	

Reference Designation	Shape	Description	Remarks
		SELF-TAPPING SCREWS	
TA		self-tapping screw	ex: TA, P 3 x 10
PTP		pan-head self-tapping screw	binding-head self-tapping (TA, B) screw for replacement
PTPWH		pan-head self-tapping screw with washer face	binding-head self tapping (TA, B) screw and flat washer for replacement
PTTWH		pan-head thread-rolling screw with washer face	binding-head (B) screw and flat washer for replacement
		SET SCREWS	
SC		set screw	
SC		hexagon-socket set screw	ex: SC 2.6 x 4, hexagon socket
		NUT	
N		nut	
		WASHERS	
W		flat washer	
SW		spring washer	
LW		internal-tooth lock washer	ex: LW3, internal
LW		external-tooth lock washer	ex: LW3, external
		RETAINING RINGS	
E		retaining ring	
G		grip-type retaining ring	

KV-27XSD
RM-635

SONY
SERVICE MANUAL

AEP Model
Serial No. 3026001 and later
Chassis No. SCC-774B-A
January, 1987
No. 1

SUPPLEMENT

SUBJECT: SCM BOARD MODIFICATION

File this supplement with the service manual.

SCHEMATIC DIAGRAM

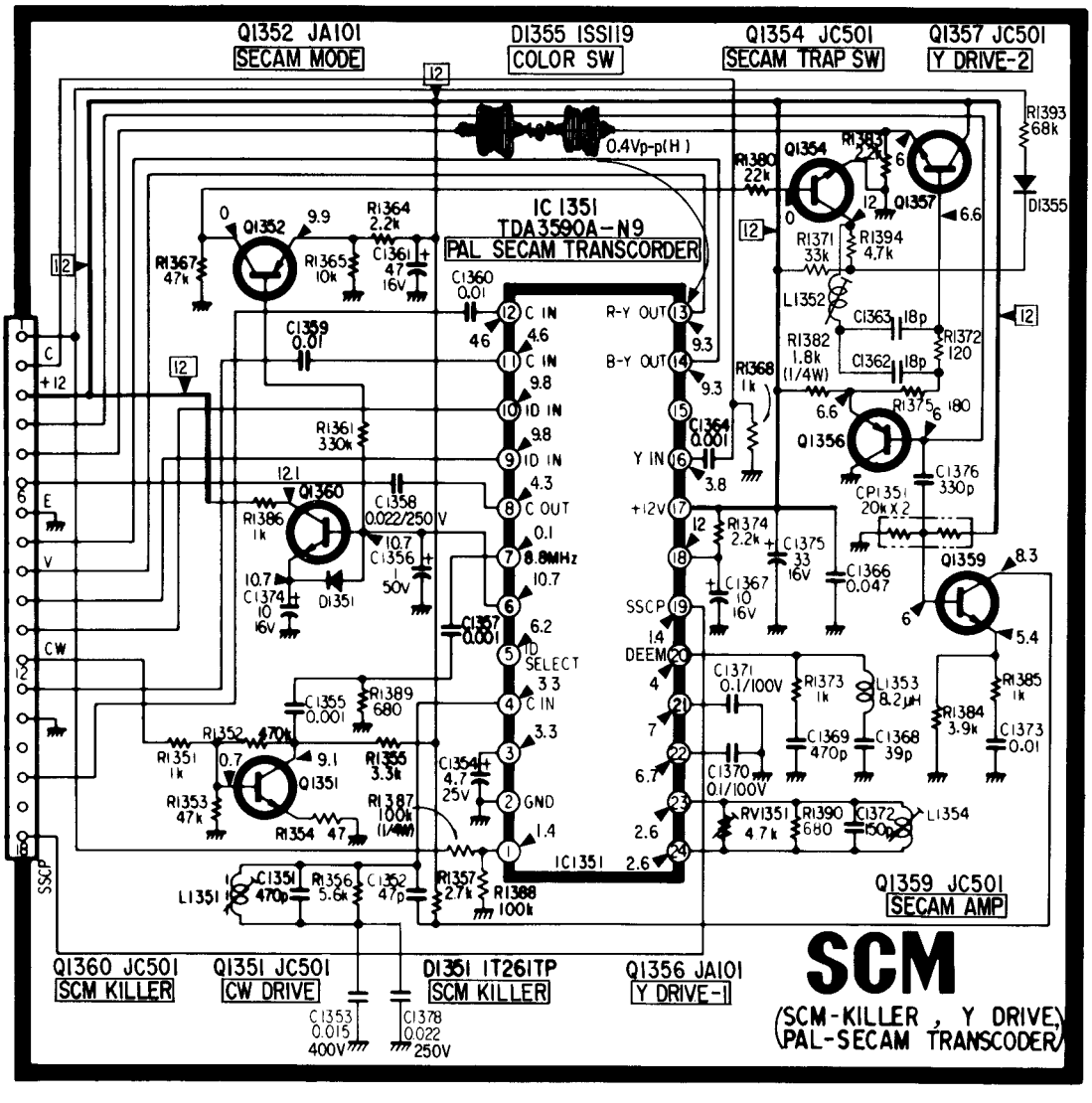

MICROFILM

CTV

MOUNTING DIAGRAM

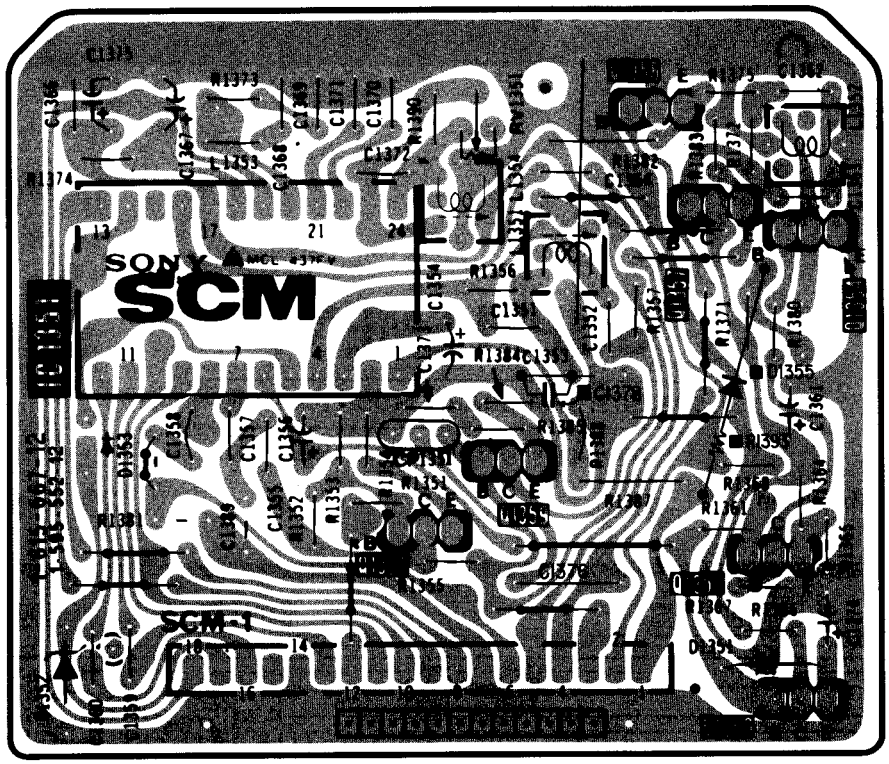

ELECTRICAL PARTS LIST

Ref.No.	Part No.	Description				Remark
	*A-1135-316-A	SCM BOARD, COMPLETE **********				
	*1-562-370-21	CONNECTOR, BOARD TO BOARD 18P				
		CAPACITOR				
C1351	1-104-069-00	POLYSTYRENE	470PF	5%	50V	
C1352	1-101-880-00	CERAMIC	47PF	5%	50V	
C1353	1-110-192-81	MYLAR	0.015MF	10%	400V	
C1354	1-123-369-00	ELECT	4.7MF	20%	25V	
C1355	1-102-074-00	CERAMIC	0.001MF	10%	50V	
C1356	1-123-380-00	ELECT	1MF	20%	50V	
C1357	1-102-074-00	CERAMIC	0.001MF	10%	50V	
C1358	1-110-182-81	MYLAR	0.022MF	10%	250V	
C1359	1-101-004-00	CERAMIC	0.01MF		50V	
C1360	1-101-004-00	CERAMIC	0.01MF		50V	
C1361	1-123-332-00	ELECT	47MF	20%	16V	
C1362	1-102-953-00	CERAMIC	18PF	5%	50V	
C1363	1-102-953-00	CERAMIC	18PF	5%	50V	
C1364	1-102-074-00	CERAMIC	0.001MF	10%	50V	
C1366	1-101-006-00	CERAMIC	0.047MF		50V	
C1367	1-123-356-00	ELECT	10MF	20%	16V	
C1368	1-102-965-00	CERAMIC	39PF	5%	50V	
C1369	1-102-824-21	CERAMIC	470PF	5%	50V	
C1370	1-110-175-81	MYLAR	0.1MF	10%	100V	
C1371	1-110-175-81	MYLAR	0.1MF	10%	100V	
C1372	1-102-736-00	CERAMIC	150PF	5%	50V	
C1373	1-101-004-00	CERAMIC	0.01MF		50V	
C1374	1-123-356-00	ELECT	10MF	20%	16V	
C1375	1-123-318-00	ELECT	33MF	20%	16V	
C1376	1-161-317-00	CERAMIC	330PF	10%	50V	
C1378	1-110-182-81	MYLAR	0.022MF	10%	250V	
		DIODE				
D1351	8-719-026-11	DIODE 1T261				
D1355	8-719-911-19	DIODE 1SS119				
		IC				
IC1351	8-759-922-68	IC TDA3590A-N8				
		COIL				
L1351	1-404-497-00	COIL				
L1352	1-404-496-00	COIL				
L1353	1-408-408-00	MICRO INDUCTOR 8.2UH				
L1354	1-404-498-00	COIL				

Ref.No.	Part No.	Description				Remark
		TRANSISTOR				
Q1351	8-729-245-83	TRANSISTOR 2SC2458				
Q1352	8-729-204-83	TRANSISTOR 2SA1048GR				
Q1354	8-729-245-83	TRANSISTOR 2SC2458				
Q1356	8-729-204-83	TRANSISTOR 2SA1048GR				
Q1357	8-729-245-83	TRANSISTOR 2SC2458				
Q1359	8-729-245-83	TRANSISTOR 2SC2458				
Q1360	8-729-245-83	TRANSISTOR 2SC2458				
		RESISTOR				
R1351	1-215-738-91	METAL	1K	5%	1/6W	
R1352	1-215-802-91	METAL	470K	5%	1/6W	
R1353	1-215-778-91	METAL	47K	5%	1/6W	
R1354	1-215-706-91	METAL	47	5%	1/6W	
R1355	1-215-750-91	METAL	3.3K	5%	1/6W	
R1356	1-215-756-91	METAL	5.6K	5%	1/6W	
R1357	1-215-748-91	METAL	2.7K	5%	1/6W	
R1361	1-215-798-91	METAL	330K	5%	1/6W	
R1364	1-215-746-91	METAL	2.2K	5%	1/6W	
R1365	1-215-762-91	METAL	10K	5%	1/6W	
R1367	1-215-778-91	METAL	47K	5%	1/6W	
R1368	1-215-738-91	METAL	1K	5%	1/6W	
R1371	1-215-774-91	METAL	33K	5%	1/6W	
R1372	1-215-716-91	METAL	120	5%	1/6W	
R1373	1-215-738-91	METAL	1K	5%	1/6W	
R1374	1-215-746-91	METAL	2.2K	5%	1/6W	
R1375	1-215-720-91	METAL	180	5%	1/6W	
R1380	1-215-770-91	METAL	22K	5%	1/6W	
R1382	1-215-158-00	METAL	1.8K	5%	1/4W	
R1383	1-215-746-91	METAL	2.2K	5%	1/6W	
R1384	1-215-752-91	METAL	3.9K	5%	1/6W	
R1385	1-215-738-91	METAL	1K	5%	1/6W	
R1386	1-215-738-91	METAL	1K	5%	1/6W	
R1387	1-215-200-00	METAL	100K	5%	1/4W	
R1388	1-215-786-91	METAL	100K	5%	1/6W	
R1389	1-215-734-91	METAL	680	5%	1/6W	
R1390	1-215-734-91	METAL	680	5%	1/6W	
R1393	**1-215-782-91**	**METAL**	**68K**	**5%**	**1/6W**	
R1394	**1-215-754-91**	**METAL**	**4.7K**	**5%**	**1/6W**	
		VARIABLE RESISTOR				
RV1351	1-230-522-11	RES, ADJ, METAL GLAZE 4.7K				

87AC0237-1
Printed in Japan
© 1987

SONY
TRINITRON® COLOR TV
KV-27XSD/RM-635

AEP Model

Chassis No. SCC-774B-A

RX-2 CHASSIS

SAFETY-RELATED COMPONENT WARNING !!

COMPONENTS IDENTIFIED BY SHADING AND MARK ⚠ ON THE SCHEMATIC DIAGRAMS, EXPLODED VIEWS AND IN THE PARTS LIST ARE CRITICAL TO SAFE OPERATION. REPLACE THESE COMPONENTS WITH SONY PARTS WHOSE PART NUMBERS APPEAR AS SHOWN IN THIS MANUAL OR IN SUPPLEMENTS PUBLISHED BY SONY.

Note: The components identified by shading and mark ⚠ are critical for safety. Replace only with part number specified.

- All capacitors are in μF unless otherwise noted. p: μμF 50WV or less are not indicated except for electrolytics.
- All resistors are in ohms, 1/6W unless otherwise noted. kΩ = 1000Ω, MΩ = 1000kΩ
- : nonflamable resistor.
- : fusible resistor
- △ : internal component.
- : panel designation.
- All variable and adjustable resistors have characteristic curve B, unless otherwise noted.
- Readings are taken with a color-bar signal input.
- Voltages are dc with respect to ground unless otherwise noted.
- All voltages are in V.
- Readings are taken with a 10MΩ digital multimeter.
- Voltage variations may be noted due to normal production tolerances.
- —— : B + bus.
- - - - : B − bus.
- ⇨ : signal path.

CIRCUIT BOARDS LOCATION

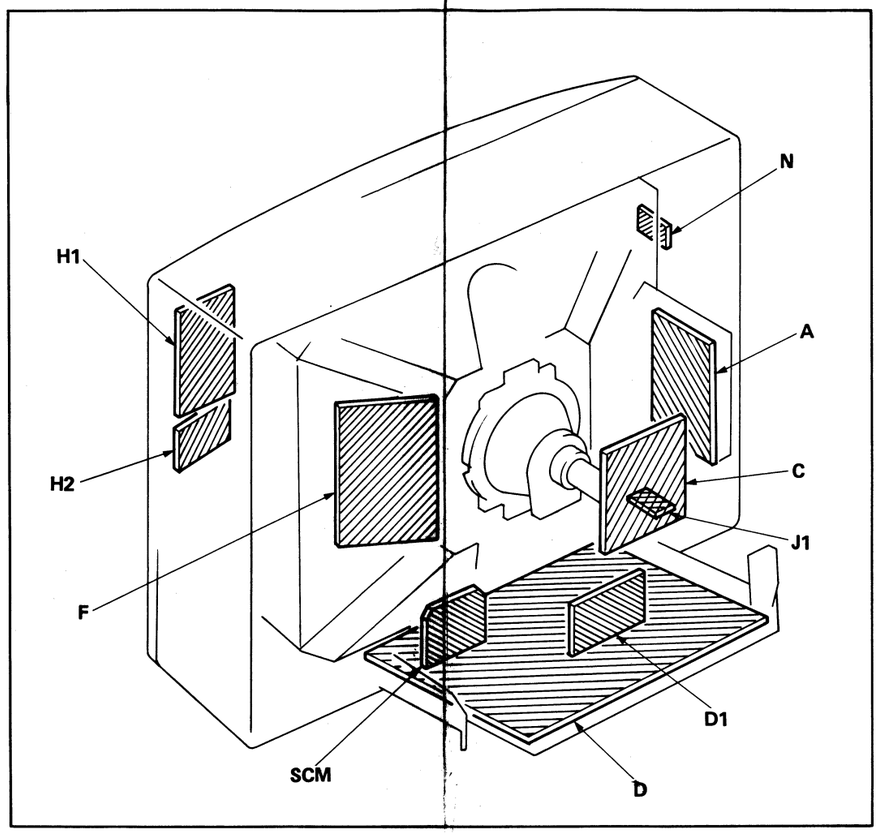

SEMICONDUCTORS

CX20061
CX20106A

CX20199
TDA3562A-N5

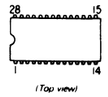

CX523-117P

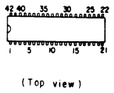

M50119P
TDA2546A
TDA2579

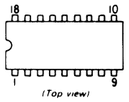

M58657P
μPC1394C
TDA4944

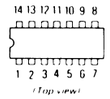

STK-4362

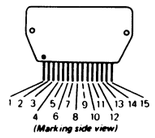

TDA1082
TDA3541

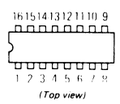

TDA3590A-N8

μPC4558C

μPC574J
μPC574J-G

2SA1048
2SA1115
2SC2458
2SC2603
2SC403SP
DTC124ES
DTC144ES

2SA1091
2SA933S
2SC1740
2SC1740S
2SC2551
2SC945
JA101
JC501

2SA1175
2SC2785

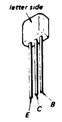

2SA1220A
2SC2611
2SC2688
2SC2690A

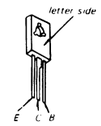

2SA773
2SB740
2SC1474
2SC1475
2SC3504
2SD788
2SD789

2SB734
2SC2958
2SC2959
2SD773
2SD774

2SC2026

2SD1497
2SD1497-06

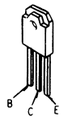

2SD795A

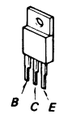

10E-2
11E2
ES1F
GP08B
RGP10G

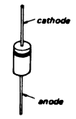

1N4148
1S1555
1S2076
1S2473
EQA02-06AV3
EQA02-07DV3
EQA02-11CV3
ERD28-06S
ERD28-08
HZ12EB2
HZ30EB4
HZ5.6EB2
HZ7.5EB2
ITT600
RD10EL1
RD10EL2
RD12EB2
RD30EB4
RD5.6EB2
RD5.6EN2
RD6.2EN2
RD6.8EN3
RD7.5EB2

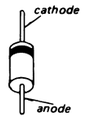

1SS119
1SS120
1SS133
1SS148

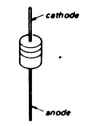

1T22
1T261

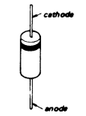

EQB01-13
ERC24-06S
SIB01-02

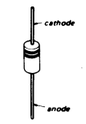

ERC26-15S

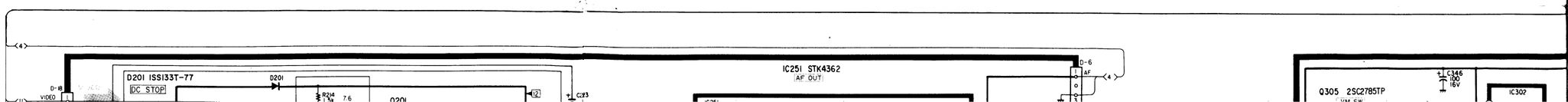

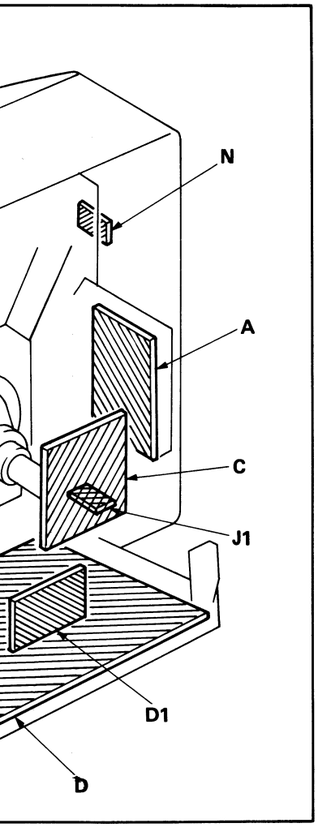

SEMICONDUCTORS

CX20061
CX20106A

CX20199
TDA3562A-N5

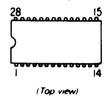

CX523-117P

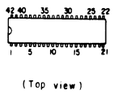

M50119P
TDA2546A
TDA2579

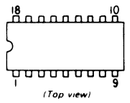

M58657P
μPC1394C
TDA4944

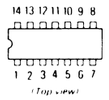

STK-4362

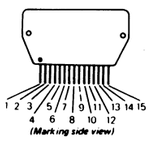

TDA1082
TDA3541

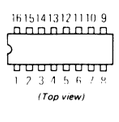

TDA3590A-N8

μPC4558C

μPC574J
μPC574J-G

2SA1048
2SA1115
2SC2458
2SC2603
2SC403SP
DTC124ES
DTC144ES

2SA1091
2SA933S
2SC1740
2SC1740S
2SC2551
2SC945
JA101
JC501

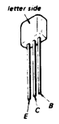

2SA1175
2SC2785

2SA1220A
2SC2611
2SC2688
2SC2690A

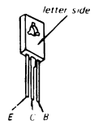

2SA773
2SB740
2SC1474
2SC1475
2SC3504
2SD788
2SD789

2SB734
2SC2958
2SC2959
2SD773
2SD774

2SC2026

2SD1497
2SD1497-06

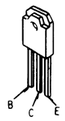

2SD795A

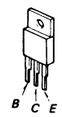

10E-2
11E2
ES1F
GP08B
RGP10G

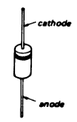

1N4148
1S1555
1S2076
1S2473
EQA02-06AV3
EQA02-07DV3
EQA02-11CV3
ERD28-06S
ERD28-08
HZ12EB2
HZ30EB4
HZ5.6EB2
HZ7.5EB2
ITT600
RD10EL1
RD10EL2
RD12EB2
RD30EB4
RD5.6EB2
RD5.6EN2
RD6.2EN2
RD6.8EN3
RD7.5EB2

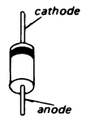

1SS119
1SS120
1SS133
1SS148

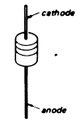

1T22
1T261

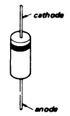

EQB01-13
ERC24-06S
SIB01-02

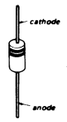

ERC26-15S

ERD29-08J

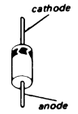

GL-2AR1

GL-9PR24

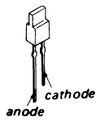

PH302B

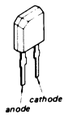

RB406NH

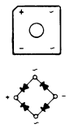

RGP15G
RGP15J

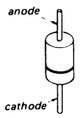

S3WB60Z
S3WB60ZS

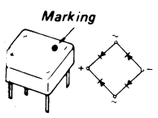

S6344G

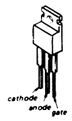

SE303AY

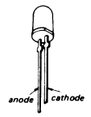

SL-1274

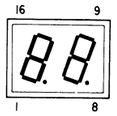

SLP144B

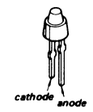

SLR-932A

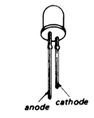

TLP581

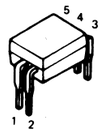

TLR124

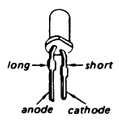

V19C
V19E

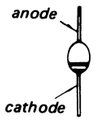

SCHEMATIC DIAGRAMS

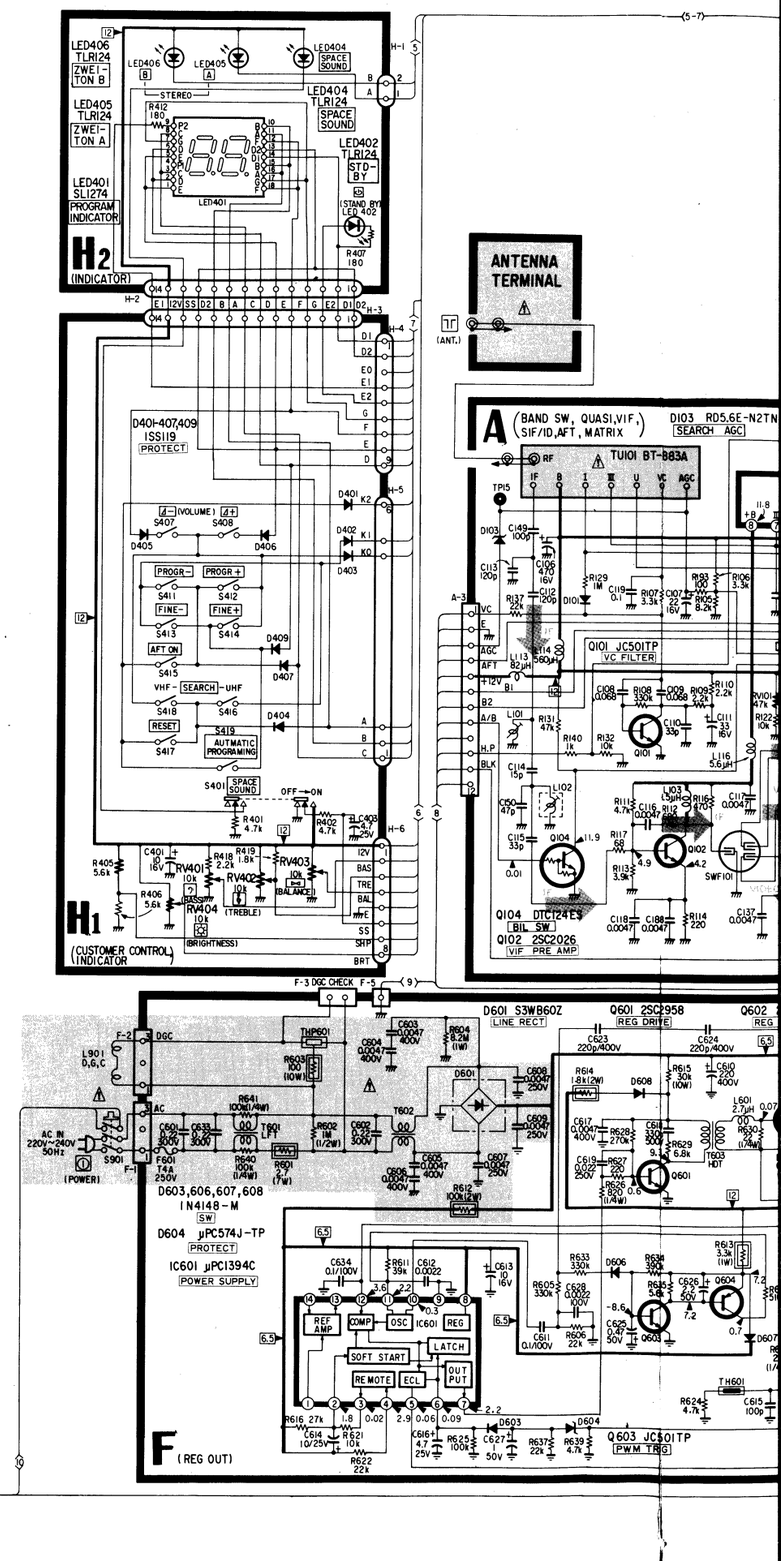

SCHEMATIC DIAGRAMS

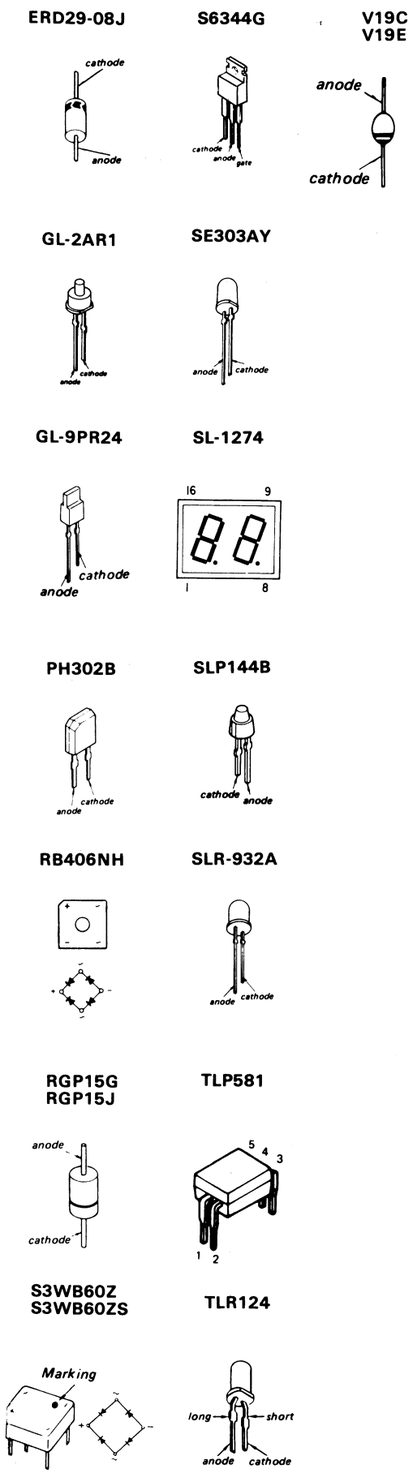

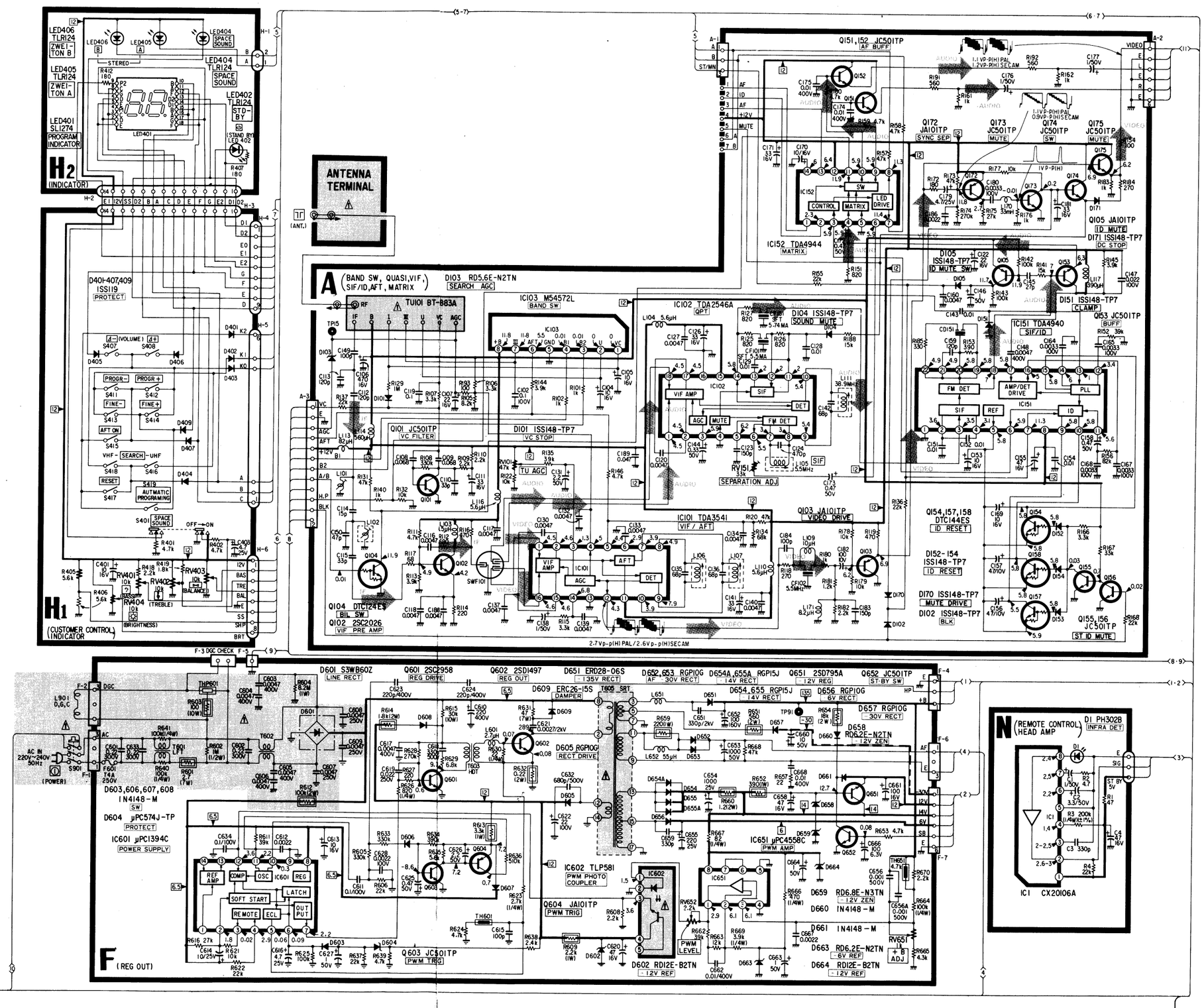

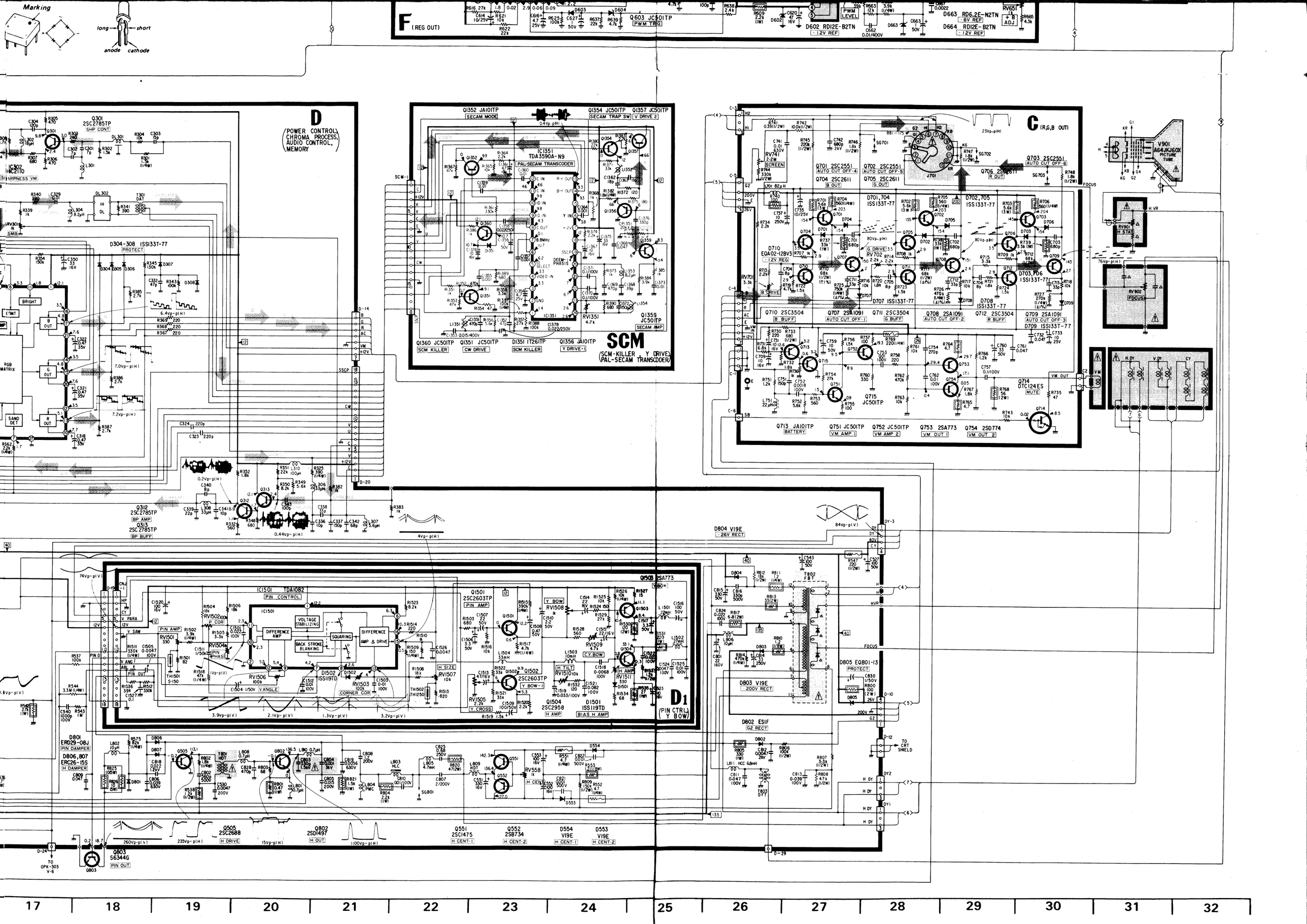
Marking
long
short
anode
cathode
F (REG OUT)
D602 RD12E-B2TN
-12V REF
D663 RD6.2E-N2TN
6V REF
D664 RD12E-B2TN
-12V REF
Q603 JC501TP
PWM TRIG
PWM LEVEL
D
(POWER CONTROL, CHROMA PROCESS, AUDIO CONTROL, MEMORY)
Q301 2SC2785TP
SHP CONT
IC302 HC2110
SHARPNESS VM
D304-308 ISS133T-77
PROTECT
RGB MATRIX
SAND DET
Q312 2SC2785TP
BP AMP
Q313 2SC2785TP
BP BUFF
SCM
(SCM-KILLER, Y DRIVE, PAL-SECAM TRANSCODER)
Q1352 JA101TP
SECAM MODE
Q1354 JC501TP
SECAM TRAP SW
Q1357 JC501TP
V DRIVE 2
IC1351 TDA3590A-N9
PAL-SECAM TRANSCODER
Q1360 JC501TP
SCM KILLER
Q1351 JC501TP
CW DRIVE
D1351 IT261TP
SCM KILLER
Q1356 JA101TP
Y DRIVE-1
Q1359 JC501TP
SECAM AMP
C
(R,G,B OUT)
Q701 2SC2551
AUTO CUT OFF-4
Q702 2SC2551
AUTO CUT OFF-5
Q703 2SC2551
AUTO CUT OFF-6
Q704 2SC2611
B OUT
Q705 2SC2611
G OUT
Q706 2SC2611
R OUT
D701,704 ISS133T-77
D702,705 ISS133T-77
D703,706 ISS133T-77
D708 ISS133T-77
D709 ISS133T-77
D710 EQA02-12BV3
-12V REG
Q710 2SC3504
B BUFF
Q707 2SA1091
AUTO CUT OFF-1
Q711 2SC3504
G BUFF
Q708 2SA1091
AUTO CUT OFF-2
Q712 2SC3504
R BUFF
Q709 2SA1091
AUTO CUT OFF-3
Q713 JA101TP
BATTERY
Q751 JC501TP
VM AMP 1
Q752 JC501TP
VM AMP 2
Q753 2SA773
VM OUT 1
Q754 2SD774
VM OUT 2
Q714 DTC124ES
MUTE
Q715 JC501TP
V901 A64JKJ60X
PICTURE TUBE
RV901 H STAT
RV902 FOCUS
D1
(PIN CTRL, Y BOW)
IC1501 TDA1082
PIN CONTROL
Q1501 2SC2603TP
PIN AMP
Q1502 2SC2603TP
Y BOW-1
Q1504 2SC2958
H AMP
D1501 ISS119TD
BIAS H AMP
Q1503 2SA773
Y BOW
D804 V19E
-26V RECT
D803 V19E
-200V RECT
D802 ESIF
G2 RECT
D805 EQB01-13
PROTECT
D801 ERD29-08J
PIN DAMPER
D806,807 ERC26-15S
H DAMPER
Q505 2SC2688
H DRIVE
Q802 2SD1497
H OUT
Q803 S6344G
PIN OUT
Q551 2SC1475
H CENT-1
Q552 2SB734
H CENT-2
D554 V19E
H CENT-1
D553 V19E
H CENT-2
TO OPK-303 V-6
TO CRT SHIELD
17
18
19
20
21
22
23
24
25
26
27
28
29
30
31
32

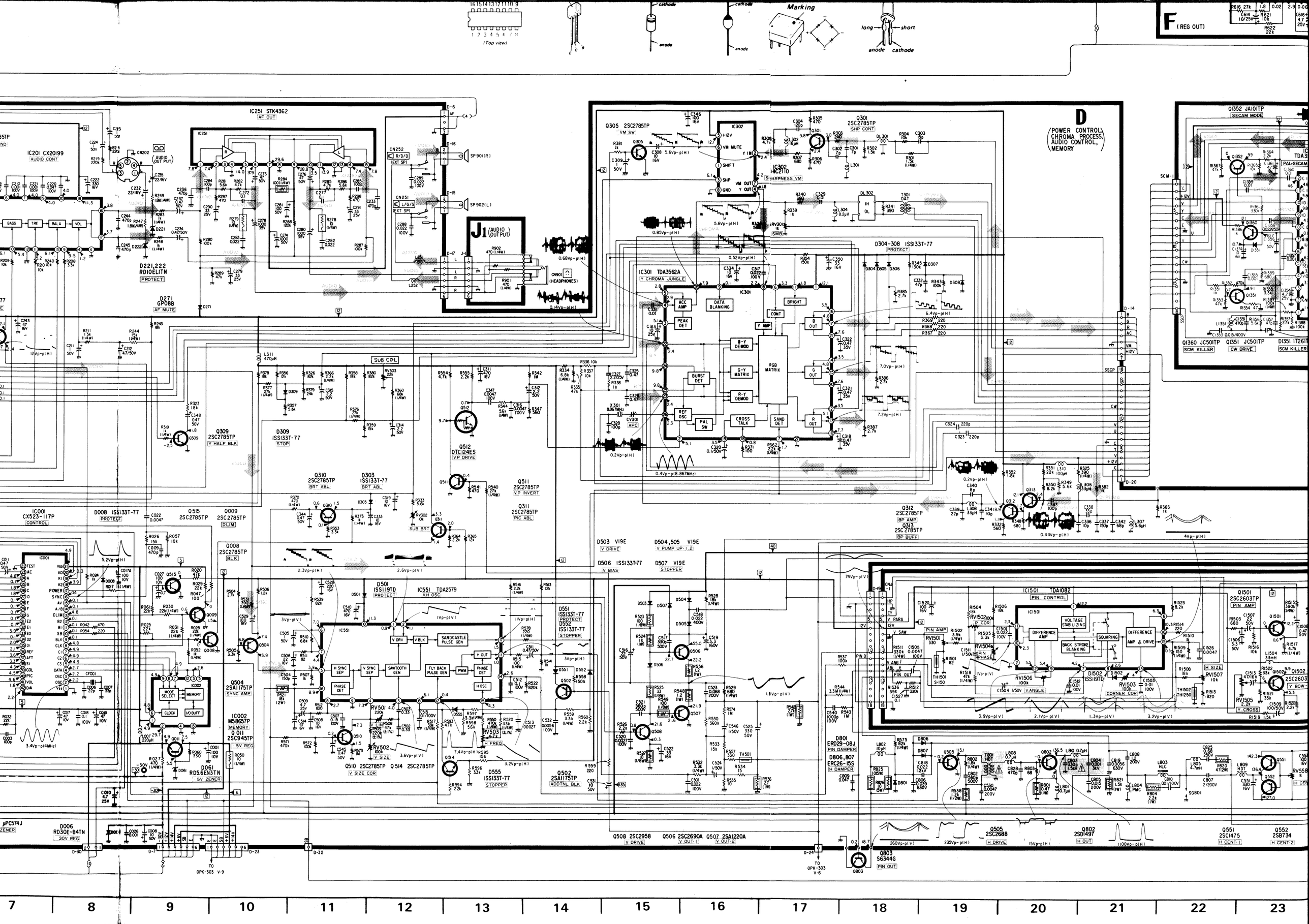
(Top view)
cathode
anode
Marking
long
short
anode
cathode
F (REG OUT)
D (POWER CONTROL, CHROMA PROCESS, AUDIO CONTROL, MEMORY)
IC251 STK4362 (AF OUT)
IC201 CX20199 (AUDIO CONT)
D221,222 RD10EL1TN (PROTECT)
D271 GP08B (AF MUTE)
J1 (AUDIO OUTPUT)
SP901(R)
SP902(L)
CN901 (HEADPHONES)
Q305 2SC2785TP (VM SW)
IC302 HC2110 (SHARPNESS VM)
Q301 2SC2785TP (SHP CONT)
D304-308 1SS133T-77 (PROTECT)
IC301 TDA3562A (Y CHROMA JUNGLE)
Q1352 JA101TP (SECAM MODE)
Q1360 JC501TP (SCM KILLER)
Q1351 JC501TP (CW DRIVE)
D1351 1T261 (SCM KILLER)
SUB COL
Q309 2SC2785TP (Y HALF BLK)
D309 1SS133T-77 (STOP)
Q512 DTC124ES (V.P DRIVE)
Q310 2SC2785TP (BRT ABL)
D303 1SS133T-77 (BRT ABL)
Q511 2SC2785TP (V.P INVERT)
Q311 2SC2785TP (PIC ABL)
Q312 2SC2785TP (BP AMP)
Q313 2SC2785TP (BP BUFF)
IC001 CX523-117P (CONTROL)
D008 1SS133T-77 (PROTECT)
Q515 2SC2785TP (DLIM)
Q009 2SC2785TP
Q008 2SC2785TP (BLK)
Q504 2SA1175TP (SYNC AMP)
IC002 M58657P (MEMORY)
Q011 2SC945TP (5V REG)
D061 RD5.6EN3TN (5V ZENER)
D006 RD30E-B4TN (30V REG)
D501 1SS119TD (PROTECT)
IC551 TDA2579 (VH OSC)
D503 V19E (V DRIVE)
D504,505 V19E (V PUMP UP-1,2)
D506 1SS133T-77 (V BIAS)
D507 V19E (STOPPER)
D551 1SS133T-77 (PROTECT)
D552 1SS133T-77 (STOPPER)
Q502 2SA1175TP (ADDTNL. BLK)
Q510 2SC2785TP Q514 2SC2785TP (V SIZE COR)
D555 1SS133T-77 (STOPPER)
Q508 2SC2958 (V DRIVE)
Q506 2SC2690A Q507 2SA1220A (V OUT-1, V OUT-2)
IC501 TDA1082 (PIN CONTROL)
Q1501 2SC2603TP (PIN AMP)
Q1502 2SC2603 (Y BOW)
D801 ERD29-08J (PIN DAMPER)
D806,807 ERC26-15S (H DAMPER)
Q505 2SC2688 (H DRIVE)
Q802 2SD1497 (H OUT)
Q803 S6344G (PIN OUT)
Q551 2SC1475 (H CENT-1)
Q552 2SB734 (H CENT-2)
7
8
9
10
11
12
13
14
15
16
17
18
19
20
21
22
23

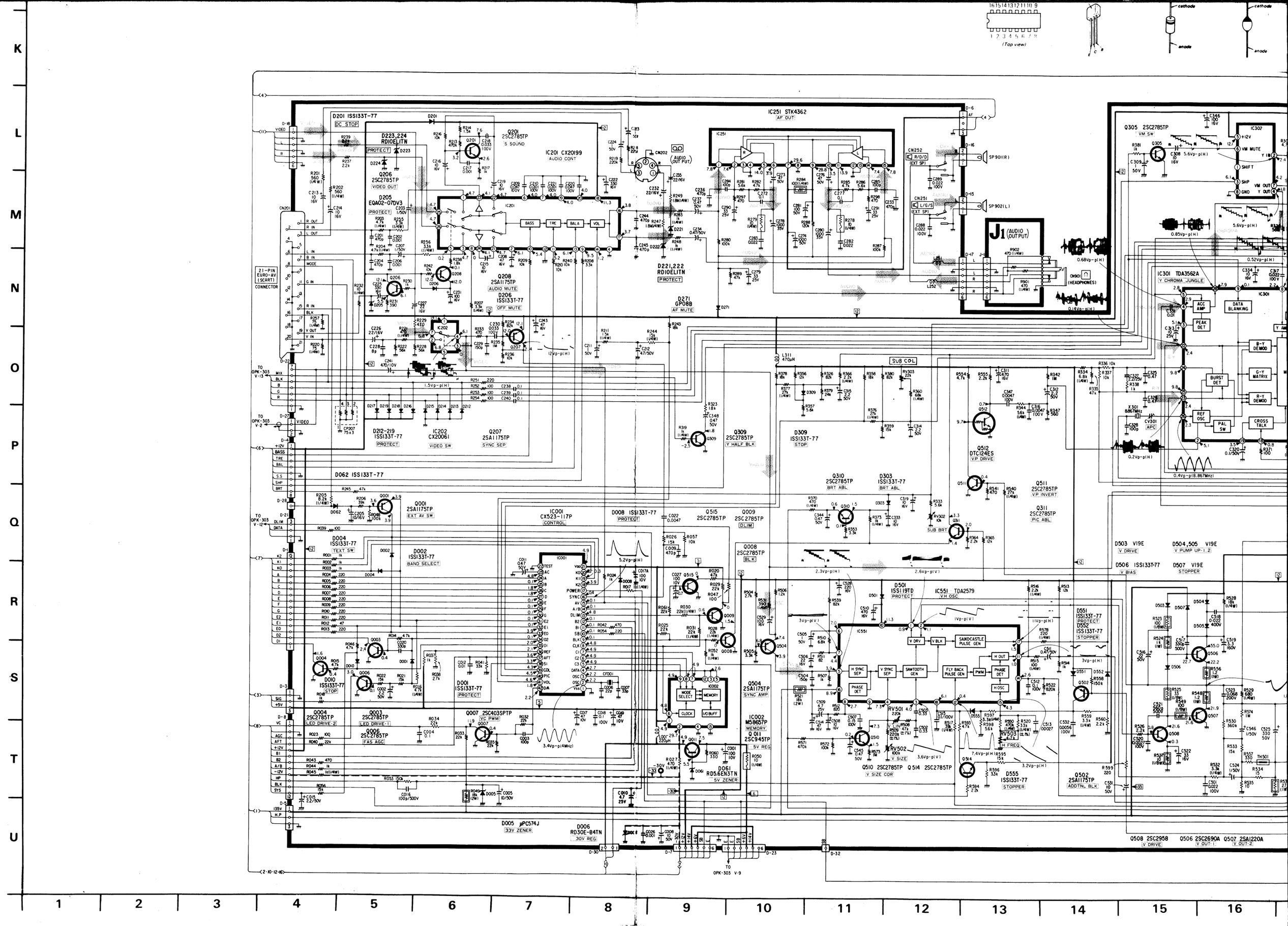

(Top view)
cathode
anode
IC251 STK4362
AF OUT
IC201 CX20199
AUDIO CONT
IC301 TDA3562A
Y CHROMA JUNGLE
IC551 TDA2579
VH OSC
IC001 CX523-117P
CONTROL
IC002 M58657P
MEMORY
D201 ISS133T-77
DC STOP
D223,224 RD10ELITN
PROTECT
Q206 2SC2785TP
VIDEO OUT
D205 EQA02-07DV3
PROTECT
Q201 2SC2785TP
S SOUND
Q208 2SA1175TP
AUDIO MUTE
D206 ISS133T-77
OFF MUTE
D221,222 RD10ELITN
PROTECT
D271 GP08B
AF MUTE
Q305 2SC2785TP
VM SW
21-PIN EURO-AV (SCART) CONNECTOR
D212-219 ISS133T-77
PROTECT
IC202 CX20061
VIDEO SW
Q207 2SA1175TP
SYNC SEP
D062 ISS133T-77
Q001 2SA1175TP
EXT AV SW
D004 ISS133T-77
TEXT SW
D002 ISS133T-77
BAND SELECT
D010 ISS133T-77
STOP
D001 ISS133T-77
PROTECT
Q004 2SC2785TP
LED DRIVE-2
Q003 2SC2785TP
LED DRIVE-1
Q006 2SC2785TP
FAS AGC
Q007 2SC403SPTP
VC PWM
D005 μPC574J
33V ZENER
D006 RD30E-B4TN
30V REG
D008 ISS133T-77
PROTECT
Q515 2SC2785TP
Q009 2SC2785TP
DLIM
Q008 2SC2785TP
BLK
Q504 2SA1175TP
SYNC AMP
Q011 2SC945TP
5V REG
D061 RD5.6EN3TN
5V ZENER
Q309 2SC2785TP
Y HALF BLK
D309 ISS133T-77
STOP
Q310 2SC2785TP
BRT ABL
D303 ISS133T-77
BRT ABL
Q512 DTC124ES
VP DRIVE
Q511 2SC2785TP
VP INVERT
Q311 2SC2785TP
PIC ABL
D501 ISS119TD
PROTECT
D551 ISS133T-77
PROTECT
D552 ISS133T-77
STOPPER
Q510 2SC2785TP
V SIZE COR
Q514 2SC2785TP
D555 ISS133T-77
STOPPER
Q502 2SA1175TP
ADDTNL BLK
D503 V19E
V DRIVE
D504,505 V19E
V PUMP UP-1,2
D506 ISS133T-77
V BIAS
D507 V19E
STOPPER
Q508 2SC2958
V DRIVE
Q506 2SC2690A
V OUT-1
Q507 2SA1220A
V OUT-2
SUB COL
SUB BRT
TO OPK-303 V-9

PRINTED WIRING BOARDS

Note: All mounting diagrams are viewed from conductor side.

D [POWER CONTROL, CHROMA PROCESS, AUDIO CONTROL, MEMORY]

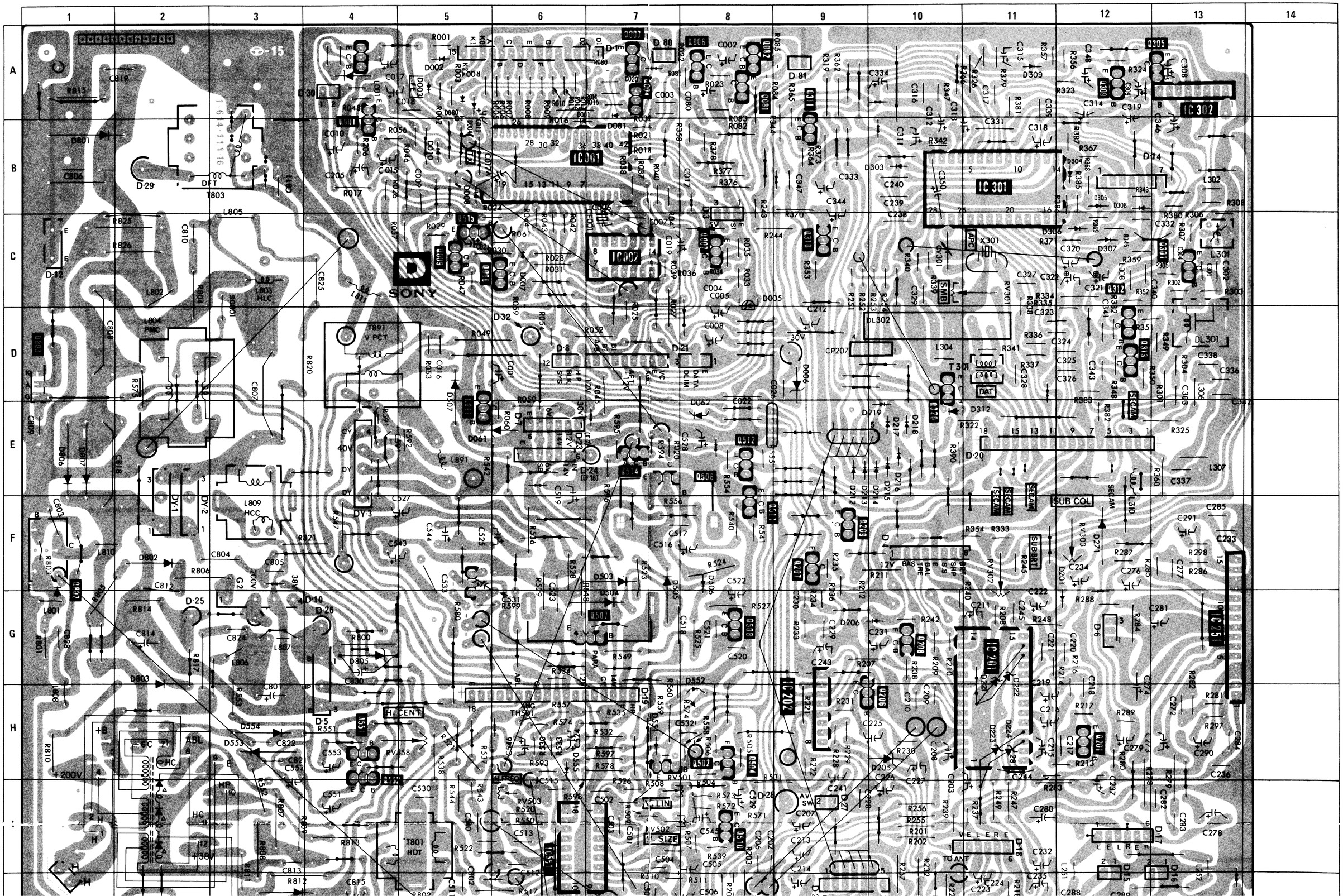

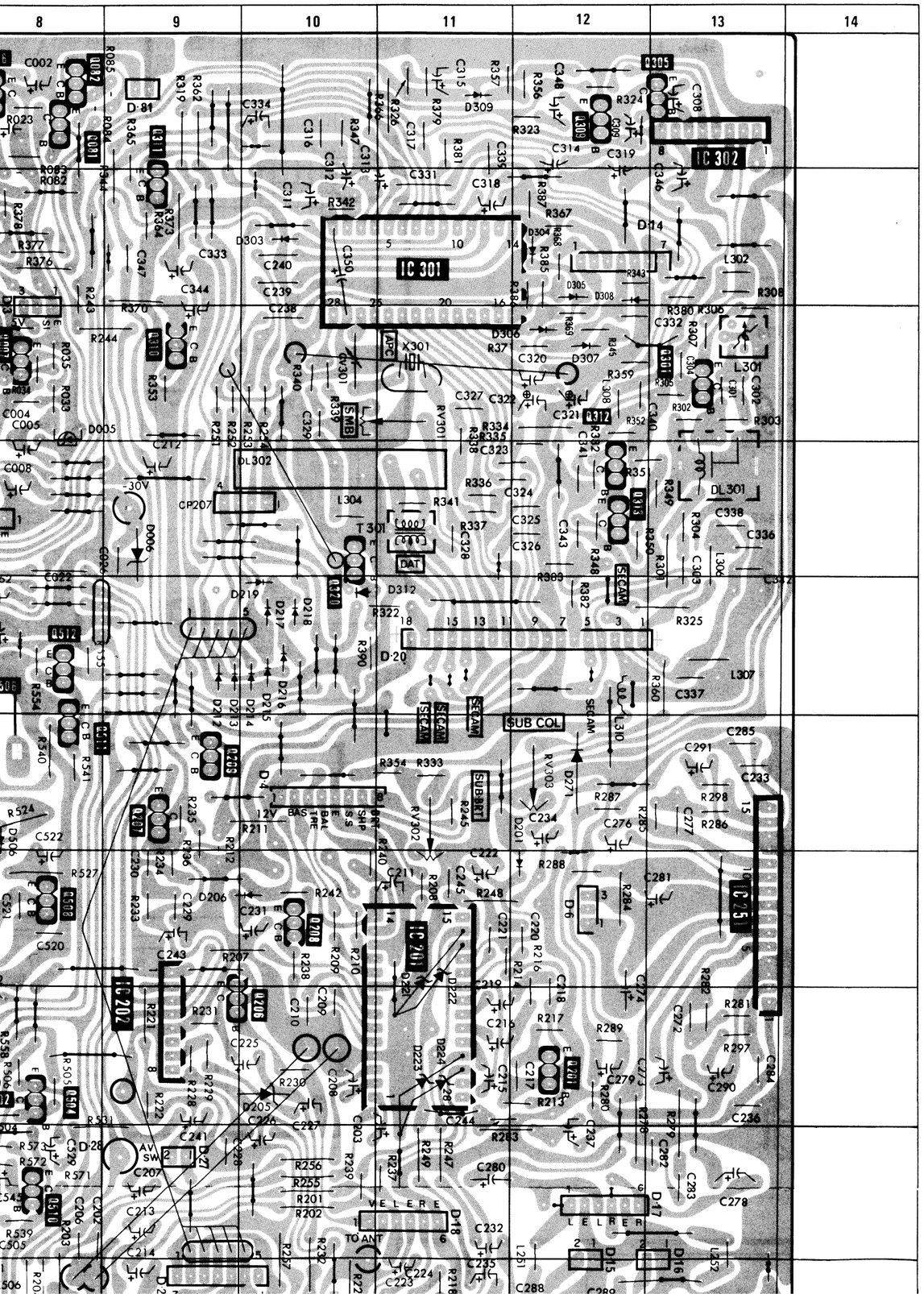

D

CAPACITOR	
C001	D-6
C002	A-8
C003	A-7
C004	C-8
C005	C-8
C006	B-7
C007	C-7
C008	D-8
C009	B-5
C010	B-4
C011	B-5
C012	B-8
C015	B-4
C016	D-5
C017	A-4
C017A	B-5
C018	A-4
C019	C-7
C020	A-7
C022	D-8
C026	D-8
C027	C-5
C201	J-8
C202	I-8
C203	H-10
C204	J-8
C205	B-4
C206	I-8
C207	I-9
C208	H-10
C209	H-10
C210	H-10
C211	G-11
C212	C-9
C213	I-9
C214	I-9
C215	H-11
C216	H-11
C217	H-12
C218	G-12
C219	G-11
C220	G-12
C221	G-11
C222	G-11
C223	J-11
C224	J-11
C225	H-10
C226	H-10
C227	H-10
C228	I-9
C229	G-9
C230	G-9
C231	G-9
C232	I-11
C233	F-13
C234	F-12
C235	J-11
C236	H-13
C237	H-12
C238	C-10
C239	B-10
C240	B-10
C241	I-9
C243	G-9
C244	H-11
C245	G-11
C272	H-13
C273	H-12
C274	G-12
C276	F-12
C277	F-13
C278	I-13
C279	H-12
C280	I-11
C281	G-13
C282	I-13
C283	I-13
C284	H-13
C285	F-13
C288	J-11
C289	J-12
C290	H-13
C291	F-13
C301	C-13
C302	C-13
C303	D-13
C304	C-13
C308	A-13
C309	A-12
C311	B-10
C312	A-10
C313	A-10
C314	A-12
C315	A-11
C316	A-10
C317	A-11
C318	B-11
C319	A-12
C320	C-12
C321	C-12
C322	C-11
C323	D-11
C324	D-12
C325	D-12
C326	D-12
C327	C-11
C328	D-11
C329	C-10
C331	B-11
C332	C-12
C333	B-9
C334	A-10
C336	D-13
C337	E-13
C338	D-13
C339	A-11
C340	C-13
C341	C-12
C342	D-13
C343	D-12
C344	B-9
C346	B-13
C347	B-9
C348	A-12
C350	B-10
C501	I-7
C502	I-7
C503	I-7
C504	I-7
C505	I-8
C506	J-8
C507	J-7
C508	J-8
C509	J-7
C510	J-6
C511	J-5
C512	I-6
C513	I-6
C514	J-6
C515	I-6
C516	F-7
C517	F-7
C518	G-8
C519	E-6
C520	G-8
C521	G-8
C522	F-8
C523	F-6
C524	H-6
C525	F-5
C527	F-5
C528	E-7
C529	I-8
C530	I-5
C531	G-6
C532	H-7
C540	I-5
C543	F-4
C545	I-8
C546	H-6
C551	I-4
C552	H-3
C553	H-4
C801	H-3
C802	I-5
C803	F-1
C804	F-2
C805	F-3
C806	B-1
C807	D-3
C808	D-1
C809	E-1
C810	C-2
C811	B-3
C812	F-2
C813	I-3
C814	G-2
C815	J-4
C816	J-3
C818	E-1
C819	A-2
C821	H-3
C822	H-3
C824	G-3
C825	C-4
C828	G-1
C830	G-4

FILTER	
CF001	C-6

CONNECTOR	
CN201	J-10
CN202	J-13
CN251	J-12
CN252	J-13

TRIMMER	
CV301	C-10

CONNECTOR	
D1	A-7
D3	B-8
D4	F-10
D5	H-4
D6	G-12
D7	E-6
D8	D-6
D10	G-3
D12	C-1
D14	B-12
D15	I-12
D16	I-13
D17	I-12
D18	I-11
D19	H-7
D20	E-11
D21	D-8
D22	J-9
D23	E-6
D24	E-7
D27	I-9
D28	I-8
D29	B-2
D30	A-3
D32	D-5

DIODE	
D001	A-6
D002	A-5
D003	A-5
D004	B-5
D005	C-8
D006	D-9
D008	B-5
D010	B-5
D061	E-5
D062	D-8
D201	F-12
D205	H-9
D206	G-9
D212	E-9
D213	E-9
D214	E-10
D215	E-10
D216	E-10
D217	E-10
D218	E-10
D219	E-9
D221	G-11
D222	G-11
D223	H-11
D224	H-11
D271	F-12
D303	B-9
D304	B-12
D305	B-12
D306	C-11
D307	C-12
D308	B-11
D309	A-11
D312	E-11
D501	J-5
D503	F-7
D504	G-7
D505	F-7
D506	F-8
D507	D-5
D551	H-7
D552	G-8
D553	H-3
D554	H-3
D555	H-6
D801	B-1
D802	F-2
D803	G-2
D804	J-3
D805	G-4
D806	E-1
D807	E-1

DELAY LINE	
DL301	D-13
DL302	D-10

CONNECTOR	
DY1	F-2
DY2	F-2
DY3	F-4

IC	
IC001	B-6
IC002	C-7
IC201	G-11
IC202	H-9
IC251	G-13
IC301	B-11
IC302	A-13
IC551	I-6

COIL	
L001	A-4
L251	I-12
L252	I-13
L301	C-13
L302	B-13
L304	D-10
L306	D-13
L307	E-13
L308	C-12
L310	F-1
L311	
L801	G-1
L802	C-2
L803	C-3
L804	D-2
L805	B-3
L806	G-3
L808	H-1
L809	F-3
L810	F-1
L811	C-4

TRANSISTOR	
Q001	B-4
Q003	A-7
Q004	A-7
Q006	A-8
Q007	C-8
Q008	C-5
Q009	C-5
Q011	E-5
Q201	H-12
Q206	H-10
Q207	F-9
Q208	G-10
Q301	C-13
Q305	A-13
Q309	A-12
Q310	C-9
Q311	A-9
Q312	C-12
Q313	D-12
Q320	D-10
Q502	H-8
Q504	H-8
Q505	J-4
Q506	E-8
Q507	G-6
Q508	G-8
Q510	I-8
Q511	F-8
Q512	E-8
Q514	E-7
Q515	C-5
Q551	H-4
Q552	I-4
Q802	F-1
Q803	D-1

RESISTOR	
R001	A-5
R002	A-5
R003	A-5
R004	A-5
R005	A-6
R006	A-6
R007	A-6
R008	A-6
R009	A-6
R010	A-6
R011	A-6
R012	A-6
R013	A-6
R014	A-7
R015	A-7
R016	A-6
R017	B-4
R018	B-7
R020	E-7
R021	B-7
R022	A-8
R023	A-8
R024	B-5
R025	C-7
R026	B-4
R027	C-7
R028	C-6
R029	C-5
R030	C-5
R031	C-6
R032	A-7
R033	C-8
R034	C-8
R035	C-8
R037	B-7
R038	B-7
R039	C-7
R040	B-7
R041	C-7
R042	C-6
R043	C-6
R044	B-6
R045	D-7
R046	B-5
R047	C-5
R048	A-4
R049	D-5
R050	D-6
R052	D-6
R053	D-5
R054	D-6
R056	B-4
R057	C-4
R060	E-6
R061	C-6
R201	I-10
R202	I-10
R203	I-8
R204	J-8
R205	J-8
R206	B-4
R207	G-9
R208	G-11
R209	G-10
R210	G-10
R211	F-9
R213	H-12
R214	G-12
R216	G-12
R217	H-12
R218	J-11
R219	J-10
R220	J-10
R221	H-9
R222	H-9
R228	H-9
R229	H-9
R230	H-10
R231	H-9
R232	I-10
R233	G-9
R234	F-9
R235	F9
R236	F-9
R237	I-11
R238	G-10
R239	I-10
R240	F-10
R242	G-10
R243	B-8
R244	C-8
R245	F-11
R247	I-11
R248	G-11
R249	I-11
R251	C-9
R252	C-9
R253	C-10
R254	C-10
R255	I-10
R256	I-10
R257	I-10
R278	H-12
R279	H-13
R280	H-12
R281	H-13
R282	G-13
R283	I-11
R284	G-12
R285	F-12
R286	F-13
R287	F-12
R288	G-12
R289	H-12
R297	H-13
R298	F-13
R301	D-13
R302	C-13
R303	C-13
R304	D-13
R305	C-13
R306	C-13
R307	C-13
R308	B-13
R319	A-9
R323	A-12
R324	A-12
R325	E-13
R326	A-11
R332	C-12
R333	F-11
R334	C-11
R335	C-11
R336	D-11
R337	D-11
R338	C-11
R339	C-10
R340	C-10
R341	D-11
R342	B-10
R343	B-12
R344	A-8
R345	C-12
R347	A-10
R348	D-12
R349	D-13
R350	D-12
R351	D-12
R352	C-12
R353	C-9
R354	F-10
R356	A-12
R357	A-11
R358	B-8
R359	C-12
R360	E-12
R362	A-9
R364	B-9
R365	A-9
R366	A-11
R367	B-12
R368	B-12
R369	C-12
R370	C-9
R371	C-11
R373	B-9
R376	B-8
R377	B-8
R378	B-8
R379	A-11
R380	C-13
R381	A-11
R382	E-12
R383	D-12
R385	B-12
R386	B-12
R387	B-12
R390	E-10
R504	I-8
R505	H-8
R506	H-8
R507	I-8
R508	I-7
R509	I-7
R510	J-7
R511	J-8
R512	J-7
R513	J-5
R514	J-5
R515	J-5
R516	J-5
R517	J-6
R520	I-6
R521	H-5
R522	I-5
R523	F-7
R524	F-8
R525	G-8
R526	H-7
R527	G-8
R528	F-6
R529	F-6
R530	H-6
R531	H-8
R532	H-7
R533	H-6
R534	G-6
R535	H-7
R536	F-6
R537	H-5
R538	H-5
R539	I-8
R540	F-8
R541	F-8
R542	E-5
R543	I-5
R544	I-5
R547	F-4
R548	G-6
R549	G-7
R550	I-6
R551	H-4
R552	I-3
R553	H-3
R554	E-8
R555	E-8
R556	F-7
R557	H-6
R558	H-8
R559	H-7
R560	G-7
R571	I-8
R572	I-8
R573	I-8
R574	H-6
R575	D-2
R578	H-7
R593	H-6
R594	E-7
R595	E-7
R596	E-7
R597	H-7
R598	I-6
R599	G-6
R800	G-4
R801	G-1
R802	J-5
R803	F-1
R804	C-2
R805	G-1
R806	F-2
R807	I-3
R808	I-3
R809	I-3
R810	H-1
R811	I-3
R812	J-3
R813	I-3
R814	G-2
R817	G-2
R820	D-4
R821	F-4
R825	C-2
R826	C-2

VARIABLE RESISTOR	
RV301	E-11
RV302	F-11
RV303	F-12
RV501	H-7
RV502	I-7
RV503	I-6
RV558	H-4

SPARK GAP	
SG801	C-3

TRANSFORMER	
T301	D-11
T801	I-5
T802	J-2
T803	B-3

THERMISTOR	
TH501	H-6

CRYSTAL	
X301	C-11

F [REG OUT]

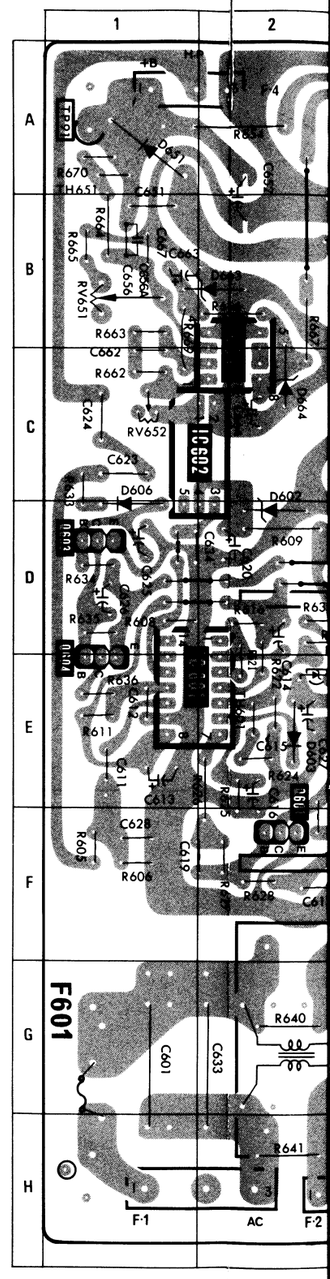

A [BAND SW, QUASI, ID, SIF, VIF, AFT, MATRIX]

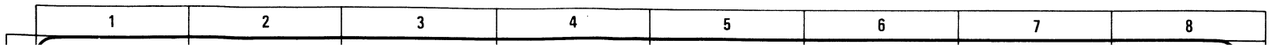

D

CAPACITOR

C001	D-6
C002	A-8
C003	A-7
C004	C-8
C005	C-8
C006	B-7
C007	C-7
C008	D-8
C009	B-5
C010	B-4
C011	B-5
C012	B-8
C015	B-4
C016	D-5
C017	A-4
C017A	B-5
C018	A-4
C019	C-7
C020	A-7
C022	D-8
C026	D-8
C027	C-5
C201	J-8
C202	I-8
C203	H-10
C204	J-8
C205	B-4
C206	I-8
C207	I-9
C208	H-10
C209	H-10
C210	H-10
C211	G-11
C212	C-9
C213	I-9
C214	I-9
C215	H-11
C216	H-11
C217	H-12
C218	G-12
C219	G-11
C220	G-12
C221	G-11
C222	G-11
C223	J-11
C224	J-11
C225	H-10
C226	H-10
C227	H-10
C228	I-9
C229	G-9
C230	G-9
C231	G-9
C232	I-11
C233	F-13
C234	F-12
C235	J-11
C236	H-13
C237	H-12
C238	C-10
C239	B-10
C240	B-10
C241	I-9
C243	G-9
C244	H-11
C245	G-11
C272	H-13
C273	H-12
C274	G-12
C276	F-12
C277	F-13
C278	I-13
C279	H-12
C280	I-11
C281	G-13
C282	I-13
C283	I-13
C284	H-13
C285	F-13
C288	J-11
C289	J-12
C290	H-13
C291	F-13
C301	C-13
C302	C-13
C303	D-13
C304	C-13
C308	A-13
C309	A-12
C311	B-10
C312	A-10
C313	A-10
C314	A-12
C315	A-11
C316	A-10
C317	A-11
C318	B-11
C319	A-12
C320	C-12
C321	C-12
C322	C-11
C323	D-11
C324	D-12
C325	D-12
C326	D-12
C327	C-11
C328	D-11
C329	C-10
C331	B-11
C332	C-12
C333	B-9
C334	A-10
C336	D-13
C337	E-13
C338	D-13
C339	A-11
C340	C-13
C341	C-12
C342	D-13
C343	D-12
C344	B-9
C346	B-13
C347	B-9
C348	A-12
C350	B-10
C501	I-7
C502	I-7
C503	I-7
C504	I-7
C505	I-8
C506	J-8
C507	J-7
C508	J-8
C509	J-7
C510	J-6
C511	J-5
C512	I-6
C513	I-6
C514	J-6
C515	I-6
C516	F-7
C517	F-7
C518	G-8
C519	E-6
C520	G-8
C521	G-8
C522	F-8
C523	F-6
C524	H-6
C525	F-5
C527	F-5
C528	E-7
C529	I-8
C530	I-5
C531	G-6
C532	H-7
C540	I-5
C543	F-4
C545	I-8
C546	H-6
C551	I-4
C552	H-3
C553	H-4
C801	H-3
C802	I-5
C803	F-1
C804	F-2
C805	F-3
C806	B-1
C807	D-3
C808	D-1
C809	E-1
C810	C-2
C811	B-3
C812	F-2
C813	I-3
C814	G-2
C815	J-4
C816	J-3
C818	E-1
C819	A-2
C821	H-3
C822	H-3
C824	G-3
C825	C-4
C828	G-1
C830	G-4

FILTER

CF001	C-6

CONNECTOR

CN201	J-10
CN202	J-13
CN251	J-12
CN252	J-13

TRIMMER

CV301	C-10

CONNECTOR

D1	A-7
D3	B-8
D4	F-10
D5	H-4
D6	G-12
D7	E-6
D8	D-6
D10	G-3
D12	C-1
D14	B-12
D15	I-12
D16	I-13
D17	I-12
D18	I-11
D19	H-7
D20	E-11
D21	D-8
D22	J-9
D23	E-6
D24	E-7
D27	I-9
D28	I-8
D29	B-2
D30	A-3
D32	D-5

DIODE

D001	A-6
D002	A-5
D003	A-5
D004	B-5
D005	C-8
D006	D-9
D008	B-5
D010	B-5
D061	E-5
D062	D-8
D201	F-12
D205	H-9
D206	G-9
D212	E-9
D213	E-9
D214	E-10
D215	E-10
D216	E-10
D217	E-10
D218	E-10
D219	E-9
D221	G-11
D222	G-11
D223	H-11
D224	H-11
D271	F-12
D303	B-9
D304	B-12
D305	B-12
D306	C-11
D307	C-12
D308	B-11
D309	A-11
D312	E-11
D501	J-5
D503	F-7
D504	G-7
D505	F-7
D506	F-8
D507	D-5
D551	H-7
D552	G-8
D553	H-3
D554	H-3
D555	H-6
D801	B-1
D802	F-2
D803	G-2
D804	J-3
D805	G-4
D806	E-1
D807	E-1

DELAY LINE

DL301	D-13
DL302	D-10

CONNECTOR

DY1	F-2
DY2	F-2
DY3	F-4

IC

IC001	B-6
IC002	C-7
IC201	G-11
IC202	H-9
IC251	G-13
IC301	B-11
IC302	A-13
IC551	I-6

COIL

L001	A-4
L251	I-12
L252	I-13
L301	C-13
L302	B-13
L304	D-10
L306	D-13
L307	E-13
L308	C-12
L310	F-1
L311	
L801	G-1
L802	C-2
L803	C-3
L804	D-2
L805	B-3
L806	G-3
L808	H-1
L809	F-3
L810	F-1
L811	C-4

TRANSISTOR

Q001	B-4
Q003	A-7
Q004	A-7
Q006	A-8
Q007	C-8
Q008	C-5
Q009	C-5
Q011	E-5
Q201	H-12
Q206	H-10
Q207	F-9
Q208	G-10
Q301	C-13
Q305	A-13
Q309	A-12
Q310	C-9
Q311	A-9
Q312	C-12
Q313	D-12
Q320	D-10
Q502	H-8
Q504	H-8
Q505	J-4
Q506	E-8
Q507	G-6
Q508	G-8
Q510	I-8
Q511	F-8
Q512	E-8
Q514	E-7
Q515	C-5
Q551	H-4
Q552	I-4
Q802	F-1
Q803	D-1

RESISTOR

R001	A-5
R002	A-5
R003	A-5
R004	A-5
R005	A-6
R006	A-6
R007	A-6
R008	A-6
R009	A-6
R010	A-6
R011	A-6
R012	A-6
R013	A-6
R014	A-7
R015	A-7
R016	A-6
R017	B-4
R018	B-7
R020	E-7
R021	B-7
R022	A-8
R023	A-8
R024	B-5
R025	C-7
R026	B-4
R027	C-7
R028	C-6
R029	C-5
R030	C-5
R031	C-6
R032	A-7
R033	C-8
R034	C-8
R035	C-8
R037	B-7
R038	B-7
R039	C-7
R040	B-7
R041	C-7
R042	C-6
R043	C-6
R044	B-6
R045	D-7
R046	B-5
R047	C-5
R048	A-4
R049	D-5
R050	D-6
R052	D-6
R053	D-5
R054	D-6
R056	B-4
R057	C-4
R060	E-6
R061	C-6
R201	I-10
R202	I-10
R203	I-8
R204	J-8
R205	J-8
R206	B-4
R207	G-9
R208	G-11
R209	G-10
R210	G-10
R211	F-9
R213	H-12
R214	G-12
R216	G-12
R217	H-12
R218	J-11
R219	J-10
R220	J-10
R221	H-9
R222	H-9
R228	H-9
R229	H-9
R230	H-10
R231	H-9
R232	I-10
R233	G-9
R234	F-9
R235	F9
R236	F-9
R237	I-11
R238	G-10
R239	I-10
R240	F-10
R242	G-10
R243	B-8
R244	C-8
R245	F-11
R247	I-11
R248	G-11
R249	I-11
R251	C-9
R252	C-9
R253	C-10
R254	C-10
R255	I-10
R256	I-10
R257	I-10
R278	H-12
R279	H-13
R280	H-12
R281	H-13
R282	G-13
R283	I-11
R284	G-12
R285	F-12
R286	F-13
R287	F-12
R288	G-12
R289	H-12
R297	H-13
R298	F-13
R301	D-13
R302	C-13
R303	C-13
R304	D-13
R305	C-13
R306	C-13
R307	C-13
R308	B-13
R319	A-9
R323	A-12
R324	A-12
R325	E-13
R326	A-11
R332	C-12
R333	F-11
R334	C-11
R335	C-11
R336	D-11
R337	D-11
R338	C-11
R339	C-10
R340	C-10
R341	D-11
R342	B-10
R343	B-12
R344	A-8
R345	C-12
R347	A-10
R348	D-12
R349	D-13
R350	D-12
R351	D-12
R352	C-12
R353	C-9
R354	F-10
R356	A-12
R357	A-11
R358	B-8
R359	C-12
R360	E-12
R362	A-9
R364	B-9
R365	A-9
R366	A-11
R367	B-12
R368	B-12
R369	C-12
R370	C-9
R371	C-11
R373	B-9
R376	B-8
R377	B-8
R378	B-8
R379	A-11
R380	C-13
R381	A-11
R382	E-12
R383	D-12
R385	B-12
R386	B-12
R387	B-12
R390	E-10
R504	I-8
R505	H-8
R506	H-8
R507	I-8
R508	I-7
R509	I-7
R510	J-7
R511	J-8
R512	J-7
R513	J-5
R514	J-5
R515	J-5
R516	J-5
R517	J-6
R520	I-6
R521	H-5
R522	I-5
R523	F-7
R524	F-8
R525	G-8
R526	H-7
R527	G-8
R528	F-6
R529	F-6
R530	H-6
R531	H-8
R532	H-7
R533	H-6
R534	G-6
R535	H-7
R536	F-6
R537	H-5
R538	H-5
R539	I-8
R540	F-8
R541	F-8
R542	E-5
R543	I-5
R544	I-5
R547	F-4
R548	G-6
R549	G-7
R550	I-6
R551	H-4
R552	I-3
R553	H-3
R554	E-8
R555	E-8
R556	F-7
R557	H-6
R558	H-8
R559	H-7
R560	G-7
R571	I-8
R572	I-8
R573	I-8
R574	H-6
R575	D-2
R578	H-7
R593	H-6
R594	E-7
R595	E-7
R596	E-7
R597	H-7
R598	I-6
R599	G-6
R800	G-4
R801	G-1
R802	J-5
R803	F-1
R804	C-2
R805	G-1
R806	F-2
R807	I-3
R808	I-3
R809	I-3
R810	H-1
R811	I-3
R812	J-3
R813	I-3
R814	G-2
R817	G-2
R820	D-4
R821	F-4
R825	C-2
R826	C-2

VARIABLE RESISTOR

RV301	E-11
RV302	F-11
RV303	F-12
RV501	H-7
RV502	I-7
RV503	I-6
RV558	H-4

SPARK GAP

SG801	C-3

TRANSFORMER

T301	D-11
T801	I-5
T802	J-2
T803	B-3

THERMISTOR

TH501	H-6

CRYSTAL

X301	C-11

F [REG OUT]

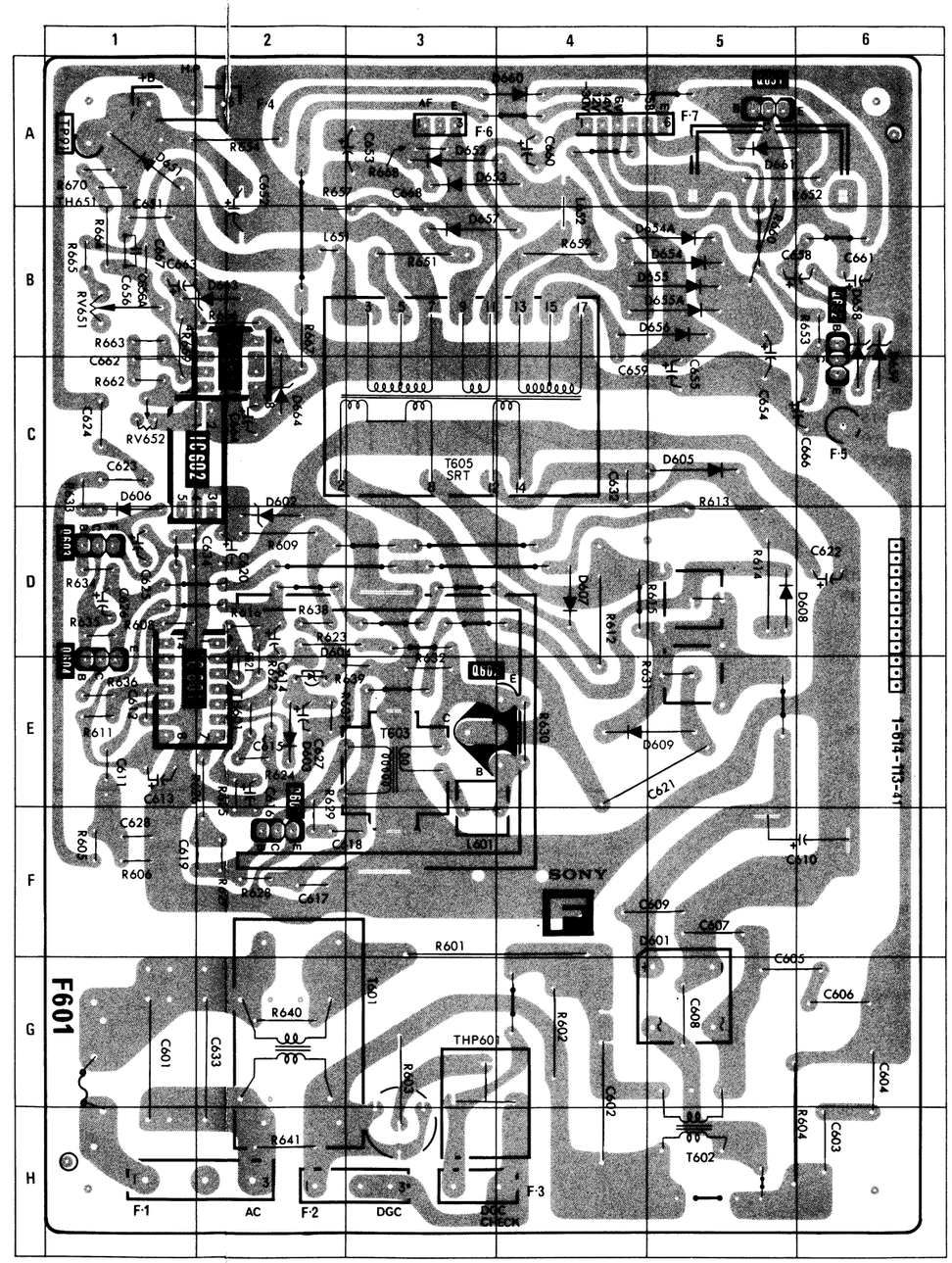

F

CAPACITOR

C601	G-1
C602	G-4
C603	H-6
C604	G-6
C605	F-5
C606	G-6
C607	F-5
C608	G-5
C609	F-4
C610	F-6
C611	E-1
C612	E-1
C613	E-1
C614	E-2
C615	E-2
C616	E-2
C617	F-2
C618	F-2
C619	F-1
C620	D-2
C621	E-5
C622	D-6
C623	C-1
C624	C-1
C625	D-1
C626	D-1
C627	E-2
C628	F-1
C632	C-4
C633	G-2
C634	D-2
C651	A-1
C652	A-2
C653	A-3
C654	C-5
C655	C-5
C656	B-1
C658	B-5
C659	C-4
C660	A-4
C661	B-6
C662	C-1
C663	B-1
C664	C-2
C666	C-6
C667	B-1
C668	A-3

DIODE

D601	F-5
D602	C-2
D603	E-2
D604	E-2
D605	C-5
D606	C-1
D607	D-4
D608	D-6
D609	E-5
D651	A-1
D652	A-3
D653	A-3
D654	B-5
D654A	B-5
D655	B-5
D655A	B-5
D656	B-5
D657	B-3
D658	B-6
D659	C-6
D660	A-4
D661	A-5
D663	B-2
D664	C-2

CONNECTOR

F1	H-1
F2	H-2
F3	H-4
F4	A-2
F5	C-6
F6	A-3
F7	A-5

FUSE

F601	G-1

IC

IC601	E-2
IC602	C-2
IC651	B-2

COIL

L601	F-3
L651	B-2
L652	A-4

TRANSISTOR

Q601	E-2
Q602	E-3
Q603	D-1
Q604	D-1
Q651	A-5
Q652	B-6

RESISTOR

R601	F-3
R602	G-4
R603	G-3
R604	H-6
R605	F-1
R606	F-1
R608	D-1
R609	D-2
R611	E-1
R612	D-4
R613	C-5
R614	D-5
R615	D-5
R616	D-2
R621	D-2
R622	E-2
R623	D-2
R624	E-2
R625	E-2
R626	E-2
R627	F-2
R628	F-2
R629	E-2
R630	E-4
R631	E-5
R632	D-3
R633	C-1
R634	D-1
R635	D-1
R636	E-1
R637	E-3
R638	D-2
R639	E-3
R640	G-2
R641	H-2
R651	B-3
R652	A-6
R653	B-6
R654	A-2
R657	A-2
R659	B-4
R660	B-5
R662	C-1
R663	B-1
R664	B-1
R665	B-1
R666	B-2
R667	B-2
R668	A-3
R669	B-1
R670	A-1

VARIABLE RESISTOR

RV651	B-1
RV652	C-1

TRANSFORMER

T601	G-3
T602	H-5
T603	E-3
T605	C-3

THERMISTOR

TH601	E-2
TH651	A-1
THP601	G-3

CIRCUIT ADJUSTMENT

+135V ADJUSTMENT | **RV651 = B-1**

1. *Adjust RV651 so that the digital multimeter (A) reading is +135V ± 0.5Vdc.*

digital multimeter (A)

PWM LEVEL | **RV652 = C-1**

1. *Adjust RV652 so that the digital multimeter (B) reading +3.0V ± 0.1Vdc.*

digital multimeter (B)

A [BAND SW, QUASI, ID, SIF, VIF, AFT, MATRIX]

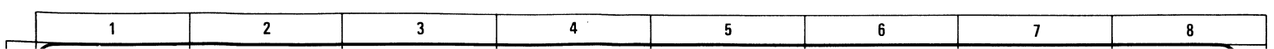

C302	C-13
C303	D-13
C304	C-13
C308	A-13
C309	A-12
C311	B-10
C312	A-10
C815	J-4
C816	J-3
C818	E-1
C819	A-2
C821	H-3
C822	H-3
C824	G-3
D507	D-5
D551	H-7
D552	G-8
D553	H-3
D554	H-3
D555	H-6
D801	B-1
Q803	D-1

RESISTOR	
R001	A-5
R002	A-5
R003	A-5
R004	A-5
R244	C-8
R245	F-11
R247	I-11
R248	G-11
R249	I-11
R251	C-9
R252	C-9
R253	C-10
R510	J-7
R511	J-8
R512	J-7
R513	J-5
R514	J-5
R515	J-5
R516	J-5

SPARK GAP	
SG801	C-3

A [BAND SW, QUASI, ID, SIF, VIF, AFT, MATRIX]

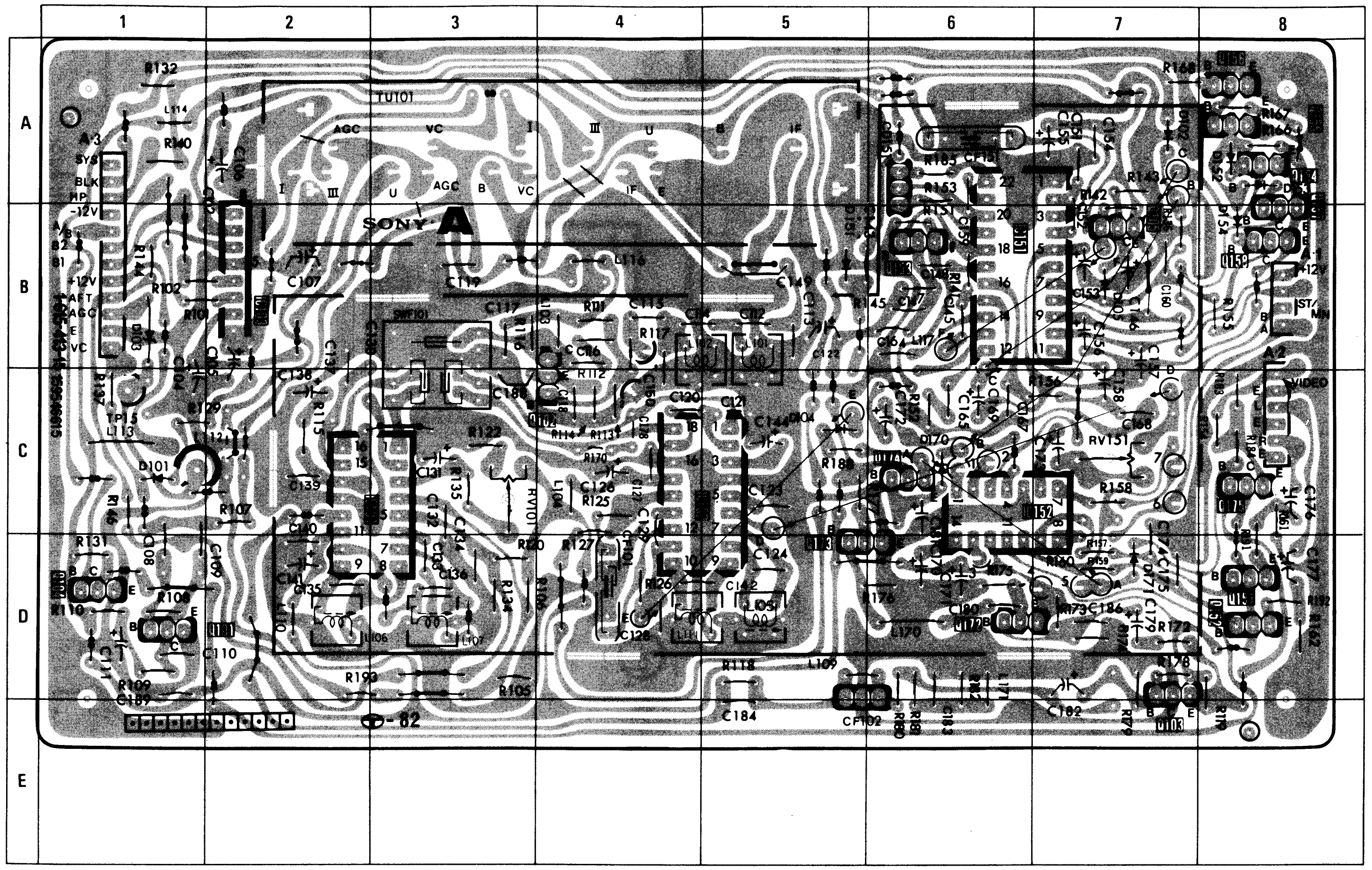

CIRCUIT ADJUSTMENT

+135V ADJUSTMENT — RV651 = B-1

1. Adjust RV651 so that the digital multimeter (A) reading is +135V ± 0.5Vdc.

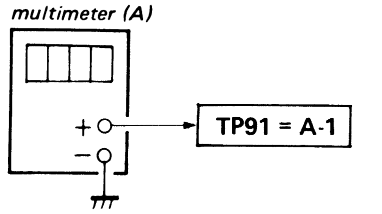

PWM LEVEL — RV652 = C-1

1. Adjust RV652 so that the digital multimeter (B) reading +3.0V ± 0.1Vdc.

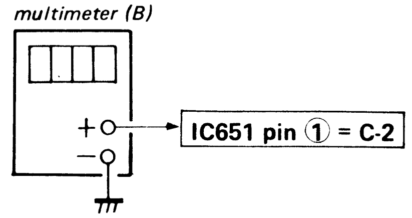

H2 [INDICATOR]

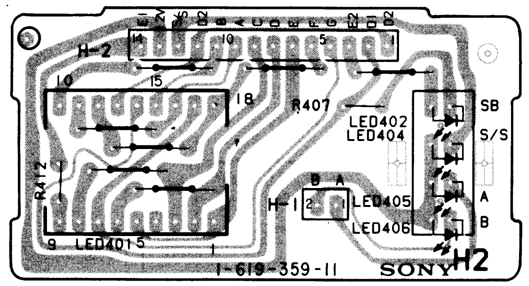

H1 [INDICATOR, CUSTOMER CONTROL]

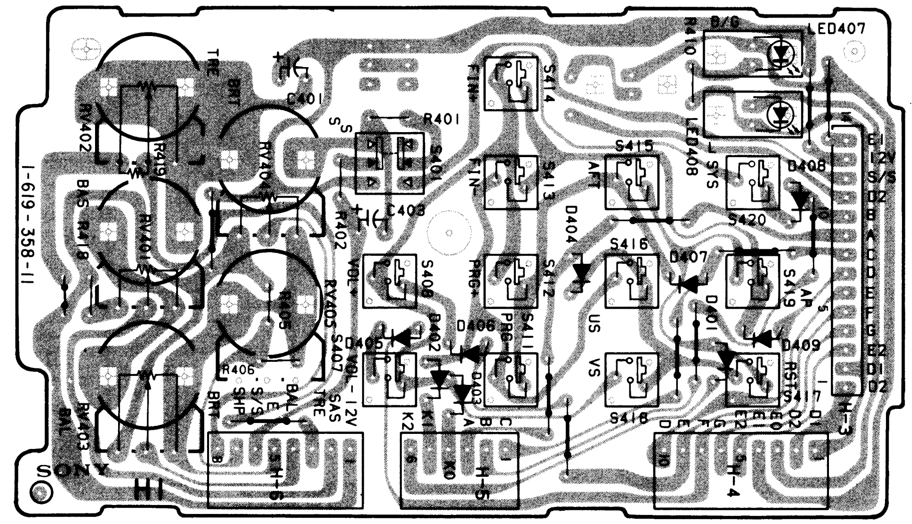

N [REMOTE CONTROL, HEAD AMP]

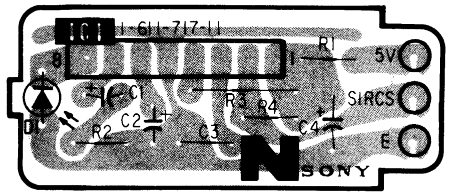

C [R.G.B OUT]

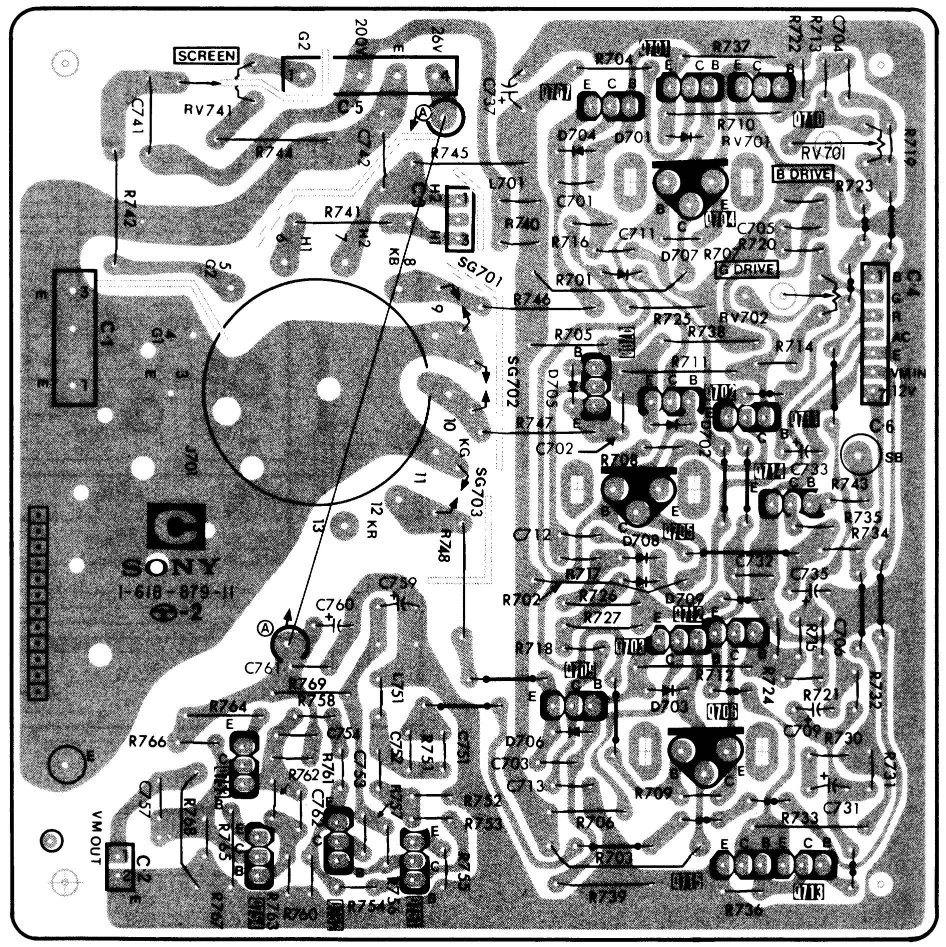

A

CONNECTOR	
A1	B-8
A2	B-8
A3	A-1

CAPACITOR	
C102	A-1
C104	B-1
C105	B-1
C106	A-2
C107	B-2
C108	C-1
C109	D-2
C110	D-1
C111	D-1
C112	B-5
C113	B-5
C114	B-4
C115	B-4
C116	B-4
C117	B-3
C118	C-4
C119	B-3
C120	C-4
C122	B-5
C123	C-5
C124	D-5
C126	C-4
C127	C-4
C128	D-4
C129	C-4
C130	B-2
C131	C-3
C132	C-3
C133	D-3
C134	C-3
C135	D-2
C136	D-3
C137	B-2
C138	B-2
C139	C-2
C140	C-2
C141	D-2
C142	D-5
C143	B-5
C144	C-5
C145	B-6
C146	B-7
C147	B-6
C148	B-6
C149	B-5
C150	C-4
C151	A-7
C152	A-7
C153	B-7
C154	A-7
C155	A-7
C156	B-7
C157	B-7
C158	C-7
C159	B-6
C160	B-7
C164	B-6
C165	C-6
C167	C-6
C168	C-7
C169	C-6
C170	D-6
C171	D-6
C172	C-6
C173	C-7
C174	C-7
C175	D-7
C176	C-8
C177	D-8
C179	D-7
C180	D-6
C181	C-6
C182	D-7
C183	D-6
C184	D-5
C186	D-7
C188	C-3
C189	D-1

FILTER	
CD151	A-6
CF101	C-4
CF102	D-5
CF151	A-6

DIODE	
D101	C-1
D102	A-7
D103	B-1
D104	C-5
D105	B-7
D151	A-5
D152	A-8
D153	A-8
D154	B-8
D170	C-6
D171	D-7

IC	
IC101	C-2
IC102	C-4
IC103	B-2
IC151	B-6
IC152	C-6

COIL	
L101	B-5
L102	B-4
L103	B-4
L104	C-4
L105	D-5
L106	D-2
L107	D-3
L109	D-5
L110	D-2
L111	D-4
L113	C-1
L114	A-1
L116	B-4
L117	B-6
L170	D-6
L171	D-6

TRANSISTOR	
Q101	D-2
Q102	C-3
Q103	D-7
Q104	D-1
Q105	B-7
Q151	D-8
Q152	D-8
Q153	B-6
Q154	A-8
Q155	A-8
Q156	A-8
Q157	A-8
Q158	B-8
Q172	D-6
Q173	C-5
Q174	C-6
Q175	C-8

RESISTOR	
R101	B-1
R102	B-1
R105	D-3
R106	D-3
R107	C-2
R108	D-1
R109	D-1
R110	D-1
R111	B-4
R112	B-4
R113	C-4
R114	C-4
R115	C-2
R116	B-3
R117	B-4
R118	D-5
R119	D-8
R120	D-3
R122	C-3
R125	C-4
R126	D-4
R127	C-4
R129	C-1
R131	C-1
R132	A-1
R134	D-3
R135	C-3
R136	A-7
R137	C-1
R140	A-1
R141	B-6
R142	A-7
R143	A-7
R144	B-1
R145	B-5
R146	C-1
R151	A-6
R152	C-6
R153	A-6
R154	C-7
R155	B-8
R156	C-6
R157	C-7
R158	C-7
R159	D-7
R160	D-7
R161	C-8
R162	D-8
R166	A-8
R167	A-8
R168	A-7
R172	D-7
R173	D-7
R174	D-7
R175	D-6
R176	D-5
R177	C-6
R178	D-7
R179	D-7
R180	D-6
R181	D-6
R182	D-6
R183	C-8
R184	C-8
R185	A-6
R188	C-5
R191	C-8
R192	D-8
R193	D-2

VARIABLE RESISTOR	
RV101	C-3
RV151	C-7

SAW FILTER	
SWF101	B-3

TUNER	
TU101	A-3

CIRCUIT ADJUSTMENT

SIF ADJUSTMENT — L105 = D-5

1. Tune in an off-air signal.
2. Adjust L105 for maximum clear-sound.

TU. AGC ADJUSTMENT — RV101 = C-3

1. Tune in an off-air signal.
2. Adjust RV101 so that snow noise and cross-modulation disappear from the picture.

SEPARATION ADJUSTMENT — RV151 = C-7

1. Receive a stereo signal (L-CH 1 kHz, R-CH 400 Hz).
2. Comfirm the stereo indicater.
3. Comfirm the output 1 kHz signal at pin ⑨ of IC152.
4. Adjust RV151 so that minimum 1 kHz signal at pin ⑩ of IC152.

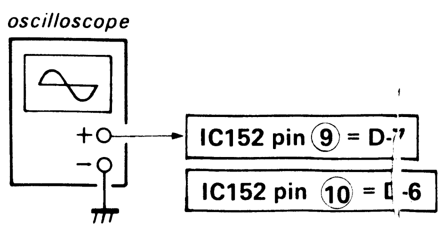

J1 [AUDIO OUTPUT]

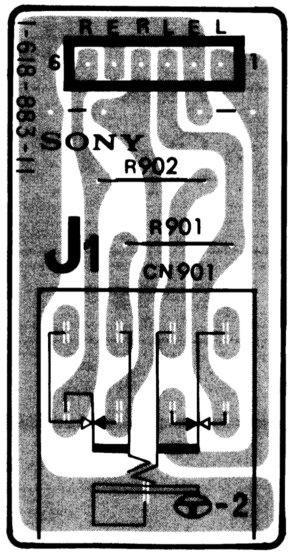

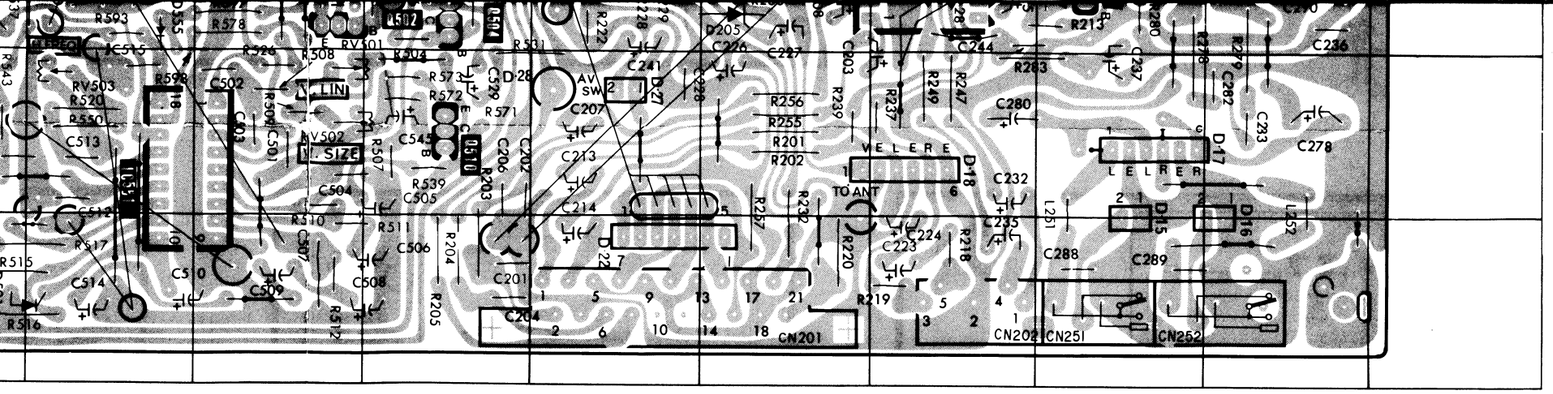

C303	D-13	C816	J-3	D551	H-7	RESISTOR		R245	F-11	R511	J-8	SPARK GAP	
C304	C-13	C818	E-1	D552	G-8			R247	I-11	R512	J-7		
C308	A-13	C819	A-2	D553	H-3	R001	A-5	R248	G-11	R513	J-5	SG801	C-3
C309	A-12			D554	H-3	R002	A-5	R249	I-11	R514	J-5		
C311	B-10	C821	H-3			R003	A-5	R251	C-9	R515	J-5		
C312	A-10	C822	H-3	D555	H-6	R004	A-5	R252	C-9	R516	J-5		
		C824	G-3	D801	B-1			R253	C-10				

A

[BAND SW, QUASI, ID, SIF, VIF, AFT, MATRIX]

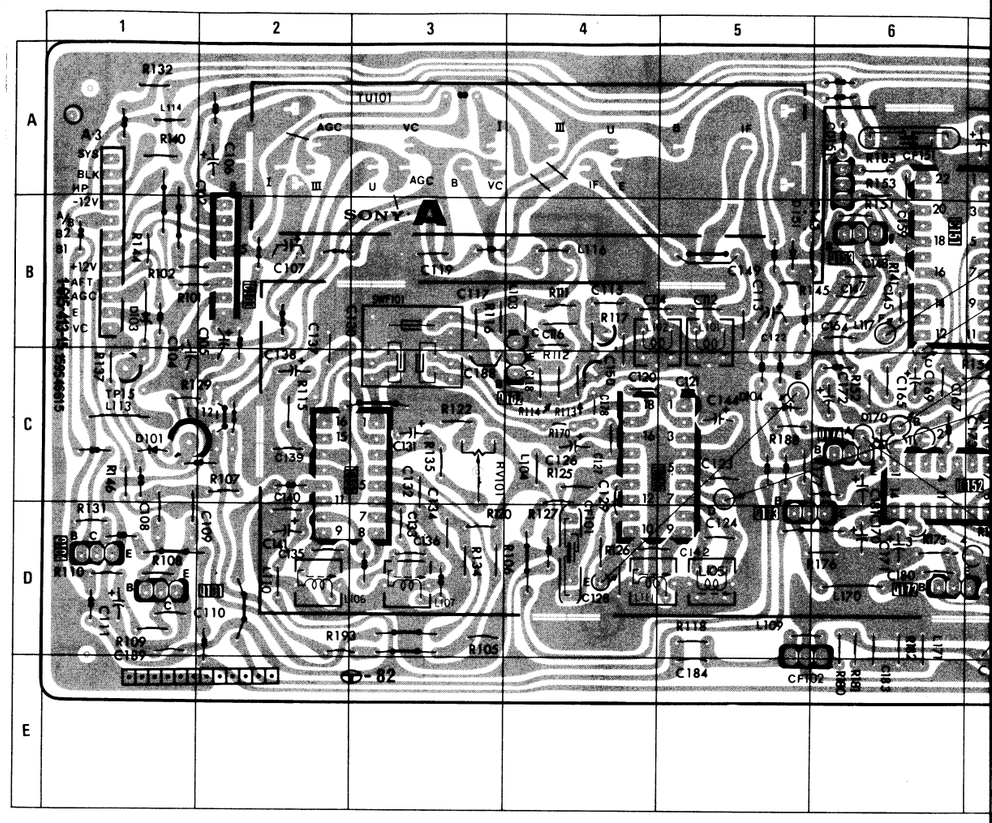

A

CONNECTOR		CAPACITOR		C135	D-2	C180	D-6	COIL		RESISTOR		R152	C-6	SAW FILTER	
				C136	D-3	C181	C-6					R153	A-6		
A1	B-8			C137	B-2	C182	D-7	L101	B-5			R154	C-7	SWF101	B-3
A2	B-8	C102	A-1	C138	B-2	C183	D-6	L102	B-4	R101	B-1				
A3	A-1	C104	B-1	C139	C-2	C184	D-5	L103	B-4	R102	B-1	R155	B-8	TUNER	
		C105	B-1	C140	C-2	C186	D-7	L104	C-4	R105	D-3	R156	C-6		
		C106	A-2	C141	D-2	C188	C-3	L105	D-5	R106	D-3	R157	C-7	TU101	A-3
		C107	B-2	C142	D-5	C189	D-1	L106	D-2	R107	C-2	R158	C-7		
		C108	C-1	C143	B-5			L107	D-3	R108	D-1	R159	D-7		
		C109	D-2	C144	C-5	FILTER		L109	D-5	R109	D-1	R160	D-7		
		C110	D-1					L110	D-2	R110	D-1	R161	C-8		
		C111	D-1	C145	B-6	CD151	A-6	L111	D-4	R111	B-4	R162	D-8		
		C112	B-5	C146	B-7	CF101	C-4	L113	C-1	R112	B-4	R166	A-8		
				C147	B-6	CF102	D-5					R167	A-8		
		C113	B-5	C148	B-6	CF151	A-6	L114	A-1	R113	C-4				
		C114	B-4	C149	B-5			L116	B-4	R114	C-4	R168	A-7		
		C115	B-4	C150	C-4			L117	B-6	R115	C-2	R172	D-7		
		C116	B-4	C151	A-7			L170	D-6	R116	B-3	R173	D-7		
		C117	B-3	C152	A-7			L171	D-6	R117	B-4	R174	D-7		
		C118	C-4	C153	B-7					R118	D-5	R175	D-6		
		C119	B-3	C154	A-7					R119	D-8	R176	D-5		
		C120	C-4							R120	D-3	R177	C-6		
		C122	B-5	C155	A-7					R122	C-3	R178	D-7		
		C123	C-5	C156	B-7					R125	C-4	R179	D-7		
				C157	B-7							R180	D-6		
		C124	D-5	C158	C-7					R126	D-4				
		C126	C-4	C159	B-6					R127	C-4	R181	D-6		
		C127	C-4	C160	B-7					R129	C-1	R182	D-6		
		C128	D-4	C164	B-6					R131	C-1	R183	C-8		
		C129	C-4	C165	C-6					R132	A-1	R184	C-8		
		C130	B-2	C167	C-6					R134	D-3	R185	A-6		
		C131	C-3	C168	C-7					R135	C-3	R188	C-5		
		C132	C-3							R136	A-7	R191	C-8		
		C133	D-3	C169	C-6					R137	C-1	R192	D-8		
		C134	C-3	C170	D-6					R140	A-1	R193	D-2		
				C171	D-6										
				C172	C-6					R141	B-6				
				C173	C-7					R142	A-7				
				C174	C-7					R143	A-7				
				C175	D-7					R144	B-1				
				C176	C-8					R145	B-5				
				C177	D-8					R146	C-1				
				C179	D-7					R151	A-6				

TRANSISTOR		VARIABLE RESISTOR	
Q101	D-2		
Q102	C-3		
Q103	D-7		
Q104	D-1		
Q105	B-7		
Q151	D-8		
Q152	D-8		
Q153	B-6		
Q154	A-8		
Q155	A-8		
Q156	A-8		
Q157	A-8		
Q158	B-8		
Q172	D-6		
Q173	C-5		
Q174	C-6		
Q175	C-8		

IC			
		RV101	C-3
IC101	C-2	RV151	C-7
IC102	C-4		
IC103	B-2		
IC151	B-6		
IC152	C-6		

= F-11

ntrol at mechanical center.
meter at pin (11) of IC301.
RV302.

C301 pin (11)
B-11

ENT | RV303 = F-12

at Norm, COLOR control at
NESS control to Mechanical

t pin (17) of IC301.
e level as shown.

ame level

pin (17)

RV503 = I-6

ntrols to initial state.
nical capacitor between IC551
H osc for free run.
picture flowing in horizontal

pcitor from IC551.

SCM

[SCM-KILLER, Y DRIVE, PAL-SECAM TRANSCODER]

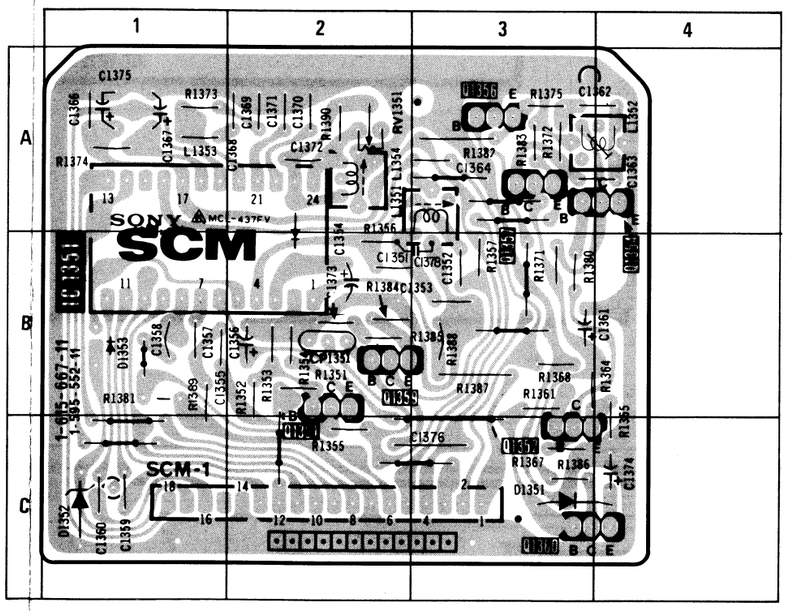

SCM

CONNECTOR		DIODE		RESISTOR	
SCM-1	C-1	D1351	C-3	R1351	B-2
				R1352	B-2
CAPACITOR		IC		R1353	B-2
				R1354	B-2
		IC1351	B-1	R1355	C-2
C1351	B-2			R1356	A-2
C1352	B-3	COIL		R1357	B-3
C1353	B-2			R1361	B-3
C1354	B-2			R1364	B-4
C1355	B-1	L1351	A-2	R1365	B-4
C1356	B-2	L1352	A-4		
C1357	B-1	L1353	A-1	R1367	C-3
C1358	B-1	L1354	A-2	R1368	B-3
C1359	C-1			R1371	B-3
C1360	C-1			R1372	A-3
				R1373	A-1
C1361	B-4	TRANSISTOR		R1374	A-1
C1362	A-3			R1375	A-3
C1363	A-4			R1380	B-3
C1364	A-3	Q1351	C-2	R1382	A-3
C1366	A-1	Q1352	C-3	R1383	A-3
C1367	A-1	Q1354	B-4		
C1368	A-1	Q1356	A-3	R1384	B-2
C1369	A-2	Q1357	B-3	R1385	B-3
C1370	A-2	Q1359	B-2	R1386	C-3
C1371	A-2	Q1360	C-3	R1387	B-3
				R1388	B-3
C1372	A-2			R1389	B-1
C1373	B-2			R1390	A-2
C1374	C-4				
C1375	A-1			VARIABLE RESISTOR	
C1376	C-3				
C1378				RV1351	A-2

CIRCUIT ADJUSTMENT

4.20MHz TRAP ADJUSTMENT | L1352 = A-4

1. Input the 4.20MHz CW signal at pin (4) of D-20 connector.
2. Connect an oscilloscope at pin (5) of D-20 connector.
3. Adjust L1352 for minimum 4.20MHz component.

D1

[PIN CTRL, Y BOW]

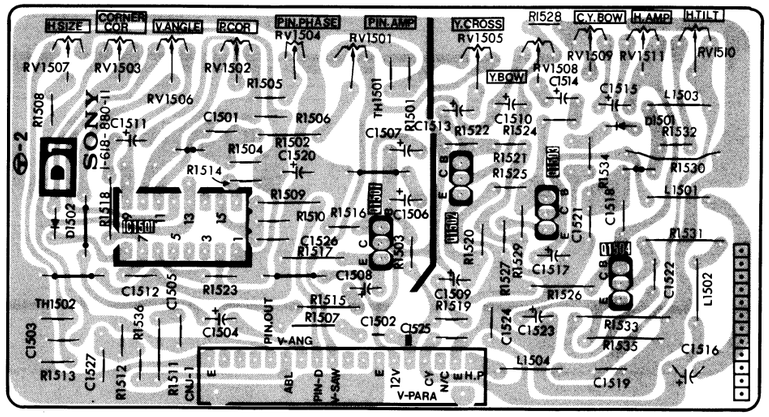

CIR

SIF A

1. Tu
2. Ad

TU. A

1. Tu
2. Ad
mo

SEPA

1. Re
2. Co
3. Co
4. Ad
(10
osc

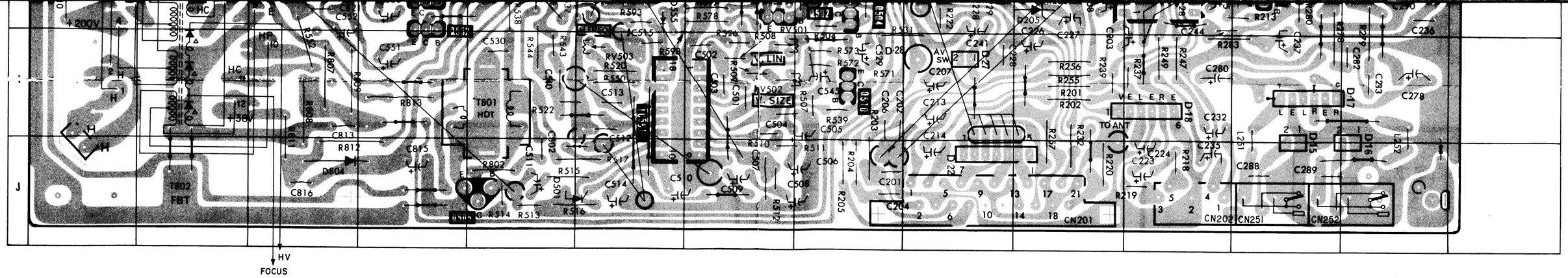

CIRCUIT ADJUSTMENT

APC ADJUSTMENT — CV301 = C-10

1. *Receive a color bar signal.*
2. *Each controls at normal.*
3. *Short circuit between pin (2) and pin (3) of IC301 with a jumper.*
4. *Connect Resistor (100kΩ/1/4W) between pin (24) and pin (25) of IC301.*
5. *Adjust CV301 to obtain the stable color picture.*
6. *Disconnect the Resistor and jumper.*

4.43MHz TRAP ADJUSTMENT — L301 = C-13

1. *Receive a color-bar signal.*
2. *Connect an Oscilloscope at pin (17) of IC301.*
3. *Set the picture control at norm, color control at minimum and BRIGHTNESS control to center click.*
4. *Adjust L301 for minimum 4.43MHz component.*

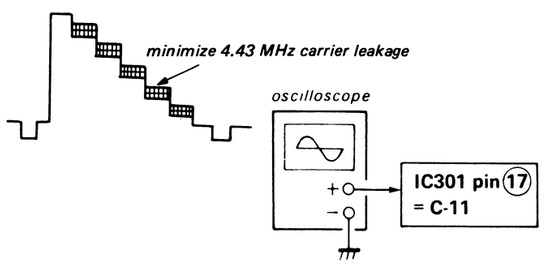

1H DL ADJUSTMENT — T301 = D-11, RV301 = C-11

1. *Receive a color bar signal.*
2. *Set the picture control at Norm and color control at minimum.*
3. *Connect an Oscilloscope at pin (17) of IC301.*
4. *Get tranking with both T301 and RV301 as shown.*

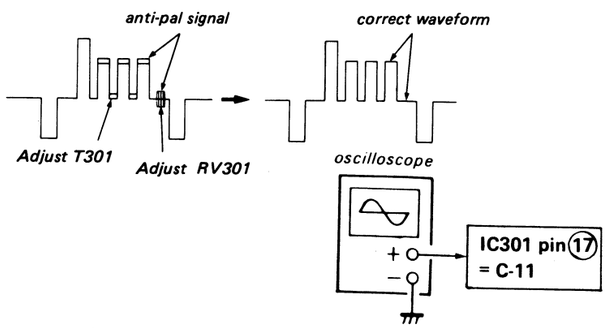

SUB BRIGHT — RV302 = F-11

1. *Receive a dot signal.*
2. *Set theBRIGHTNESS control at mechanical center.*
3. *Connect an Digital multi-meter at pin (11) of IC301.*
4. *Adjust to 2.0 ± 0.2V with RV302.*

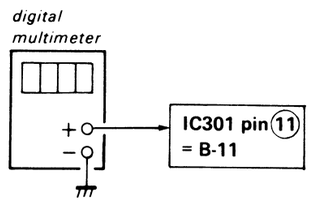

SUB COLOR ADJUSTMENT — RV303 = F-12

1. *Receive a color bar signal.*
2. *Set the picture control at Norm, COLOR control at minimum and BRIGHTNESS control to Mechanical center.*
3. *Connect an Oscilloscope at pin (17) of IC301.*
4. *Adjust RV303 so that same level as shown.*

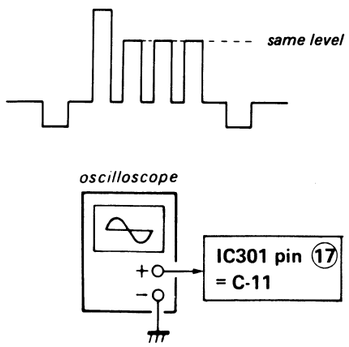

H. FREQ ADJUSTMENT — RV503 = I-6

1. *Tune in an off-air signal.*
2. *Set PICTURE and BRT controls to initial state.*
3. *Connect a 10μF/50V chemical capacitor between IC551 pin (5) and ground, and set H osc for free run.*
4. *Adjust RV503 so that picture flowing in horizontal direction stops.*
5. *Reconnect a chemical capacitor from IC551.*

SCM

[SCM-KILLER, Y DRIVE, PAL-SECAM TRANSCODER]

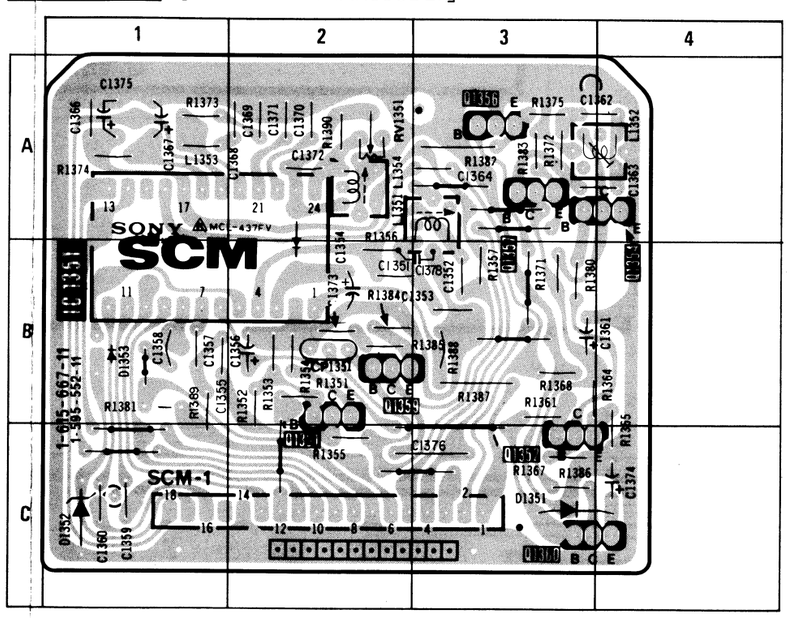

CIRCUIT ADJUSTMENT

4.20MHz TRAP ADJUSTMENT — L1352 = A-4

1. *Input the 4.20MHz CW signal at pin (4) of D-20 connector.*
2. *Connect an oscilloscope at pin (5) of D-20 connector.*
3. *Adjust L1352 for minimum 4.20MHz component.*

SCM

CONNECTOR	DIODE	RESISTOR
SCM-1 C-1	D1351 C-3	R1351 B-2
		R1352 B-2
		R1353 B-2
		R1354 B-2
		R1355 C-2
		R1356 A-2
		R1357 B-3
		R1361 B-3
		R1364 B-4
		R1365 B-4
		R1367 C-3
		R1368 B-3
		R1371 B-3
		R1372 A-3
		R1373 A-1
		R1374 A-1
		R1375 A-3
		R1380 B-3
		R1382 A-3
		R1383 A-3
		R1384 B-2
		R1385 B-3
		R1386 C-3
		R1387 B-3
		R1388 B-3
		R1389 B-1
		R1390 A-2
CAPACITOR	**IC**	**VARIABLE RESISTOR**
C1351 B-2	IC1351 B-1	RV1351 A-2
C1352 B-3	**COIL**	
C1353 B-2		
C1354 B-2	L1351 A-2	
C1355 B-1	L1352 A-4	
C1356 B-2	L1353 A-1	
C1357 B-1	L1354 A-2	
C1358 B-1		
C1359 C-1	**TRANSISTOR**	
C1360 C-1		
C1361 B-4	Q1351 C-2	
C1362 A-3	Q1352 C-3	
C1363 A-4	Q1354 B-4	
C1364 A-3	Q1356 A-3	
C1366 A-1	Q1357 B-3	
C1367 A-1	Q1359 B-2	
C1368 A-1	Q1360 C-3	
C1369 A-2		
C1370 A-2		
C1371 A-2		
C1372 A-2		
C1373 B-2		
C1374 C-4		
C1375 A-1		
C1376 C-3		
C1378		

D1
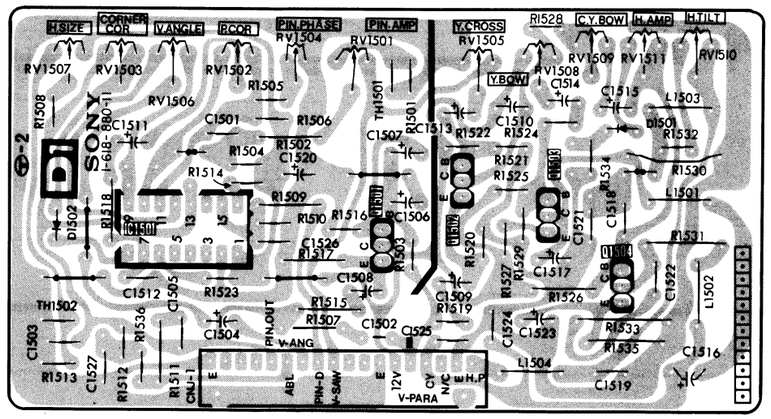
[PIN CTRL, Y BOW]